SLED Butterfly Device

RZSLD-1550-10-BS-00-14

◆ Features:

a. High power output
b. Metal-coupled and hermetic package
c. TEC inside
d. Polarization-maintaining or single-mode optical fiber
e. 14pin butterfly package

◆ Applications

a. Fiber-optic gyroscope
b. Optic test
c. Optical fiber transmission system
d. Fiber-optic sensor
e. OCT

◆ Absolute Maximum Ratings

Parameter	Symbol	Min	Max	Unit	Condition
Operating Case Temperature	T_c	-20	70	°C	--
Storage Temperature	T_{stg}	-55	85	°C	--
Reverse Voltage	Vr	--	3	V	--
Forward current	Iop		300	mA	--
Thermoelectric cooler voltage	V_{TEC}		3.0	V	--
Thermoelectric cooler current	I_{TEC}		1.5	A	--
Lead solder Temperature	--		260	°C	--
Lead Soldering Time	--		10	s	--

◆ Optical/Electrical Characteristics (T=25°C, unless otherwise stated)

Parameter	Symbol	Min	Typ	Max	Unit	Test Conditions
Optical Output Power	P_o	1	--	10.0	mW	CW,T=25℃
Forward Voltage	V_F	--	--	2.5	V	CW,T=25℃
Center Wavelength	λc	1535	--	1565	nm	CW,T=25℃
Bandwidth FWHM	Bw	30	40	-	nm	CW,T=25℃
Spectral Ripple		--	--	0.2	dB	CW,T=25℃
Polarization Extinction Ratio	PER	15	--	--	dB	High Polarization Rate
Thermistor Resistance	RT	9.5	10.0	10.5	KΩ	T=25 °C
Thermistor B-Value		--	3950	--	K	25℃/85℃

◆ Dimensions And Pin Description

Dimensions are in millimeters. All dimensions are ±0.1mm unless otherwise specified.

Type: 00

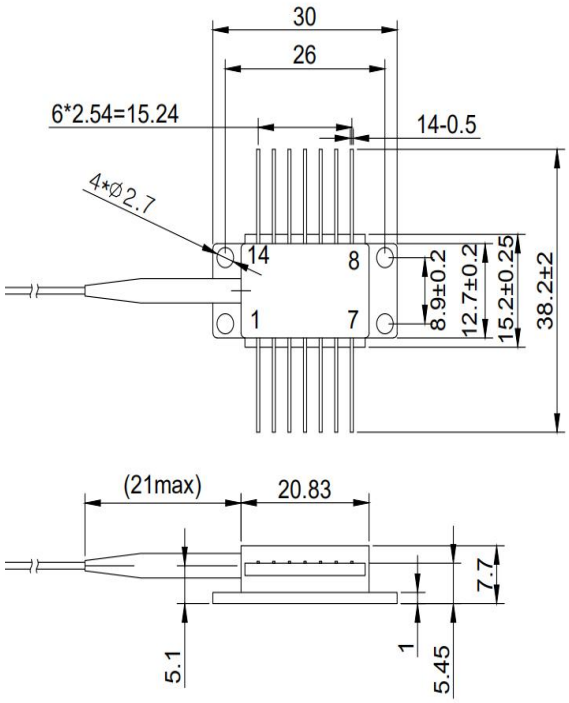

编号/PIN	针脚定义/Description
1	制冷器正极/TEC Cooler+
2	热敏电阻/Thermistor
3	PD正极/PD Anode
4	PD负极/PD Cathode
5	热敏电阻/Thermistor
6	空/NC
7	空/NC
8	空/NC
9	空/NC
10	激光器正极/LD+
11	激光器负极/LD-
12	空/NC
13	接地/Ground
14	制冷器负极/TEC Cooler-

◆ Order information

RZSLD-1550-xx-xx-xx-14

RZLD	wavelength	Output Power	Encapsulation ＆Fiber selection	Connector	PIN
RZLD=LD	…nm	…mW	BS=SMF Fiber	00=NO	14
RZSLD=SLED	974	1	BS1=BTF 6/125SM Fiber	FA=FC/APC	10
RZNLD=Narrow line width	1064	2	BS2=BTF 6/80SM Fiber	FU=FC/UPC	8
RZPLD= Pulsed laser	1310	5	BP1=BTF PM Fiber	SA=SC/APC	6
RZSOA=SOA	1550	50	BP2=BTF 80/165PM Fiber	…	
…	…	200	…		
		400			
		…			

Note:The laser module are ESD-sensitive devices. Please insure that proper ESD handling procedures are followed.