FBLD-976-60W-FC106.5-VBG-6Pin

Wavelength Stabilized Fiber-coupled Laser Diode

Features:

CW Output Power 60W
Fiber Core Diameter 106.5µm / NA 0.22
Wavelength Stabilized (VBG)
Feedback Protection Filter

Options:

Photodiode / Thermistor

Specifications	Unit	Min	Typ	Max
Optical Data				
CW Output Power	W	60	-	-
Center Wavelength λ	nm	975.5	976	976.5
Spectral Width (FWHM)	nm	-	-	0.7
Back Reflection Wavelength	nm	1040	-	1200
Back Reflection Isolation	dB	-	30	-
Wavelength Shift with Temp.	nm/°C	-	0.02	-
Wavelength Shift with Current	nm/A	-	0.03	-
Wavelength Locked Range	A	$(I_{op}-2) \sim I_{op}$		
Fiber Data				
Core Diameter	µm	-	106.5	-
Numerical Aperture	NA	-	0.22	-
Cladding Diameter	µm	-	125	-
Buffer Diameter	µm	-	250	-
Fiber Length	m	-	1	-
Fiber Bending Radius	mm	60	-	-
Electrical Data				
Threshold Current	A	-	0.9	-
Operation Current	A	-	12	13
Slope Efficiency	W/A	-	5.5	-
Electrical-to-Optical Efficiency	%	-	48	-
Operation Voltage	V	-	12	12.5

FRANKFURT LASER COMPANY
An den 30 Morgen 13, 61381 Friedrichsdorf, Germany
Tel.: +49(0)6172.27978-0 Fax: +49(0)6172.27978-10
E-mail: sales@frlaserco.com; Internet: **WWW.FRLASERCO.COM**

Specifications	Unit	Min	Typ	Max
Temperature Conditions				
Case Operation Temperature	°C	25	-	30
Storage Temperature	°C	-20	-	70
Other Parameters				
ESD	V	-	500	-
Lead Soldering Temperature	°C	-	260	-
Lead Soldering Time	sec	-	10	-
Relative Humidity	%	15	-	75

Characteristics

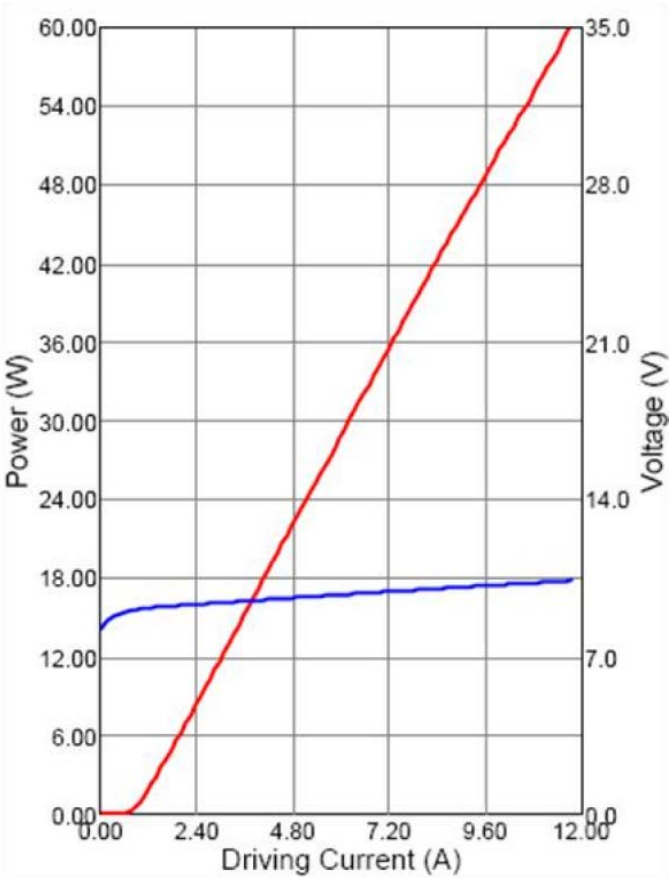

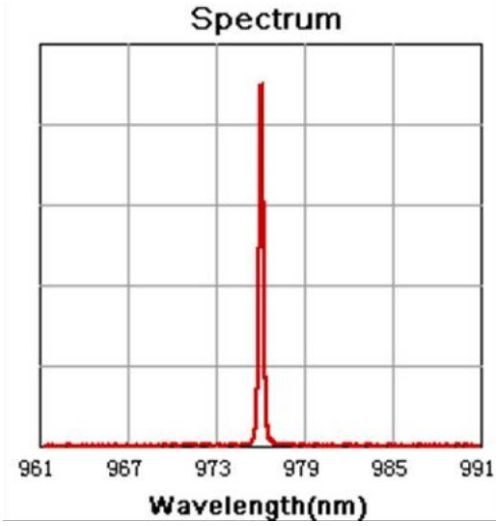

FRANKFURT LASER COMPANY
An den 30 Morgen 13, 61381 Friedrichsdorf, Germany
Tel.: +49(0)6172.27978-0 Fax: +49(0)6172.27978-10
E-mail: sales@frlaserco.com; Internet: **WWW.FRLASERCO.COM**

Package Dimensions (mm)

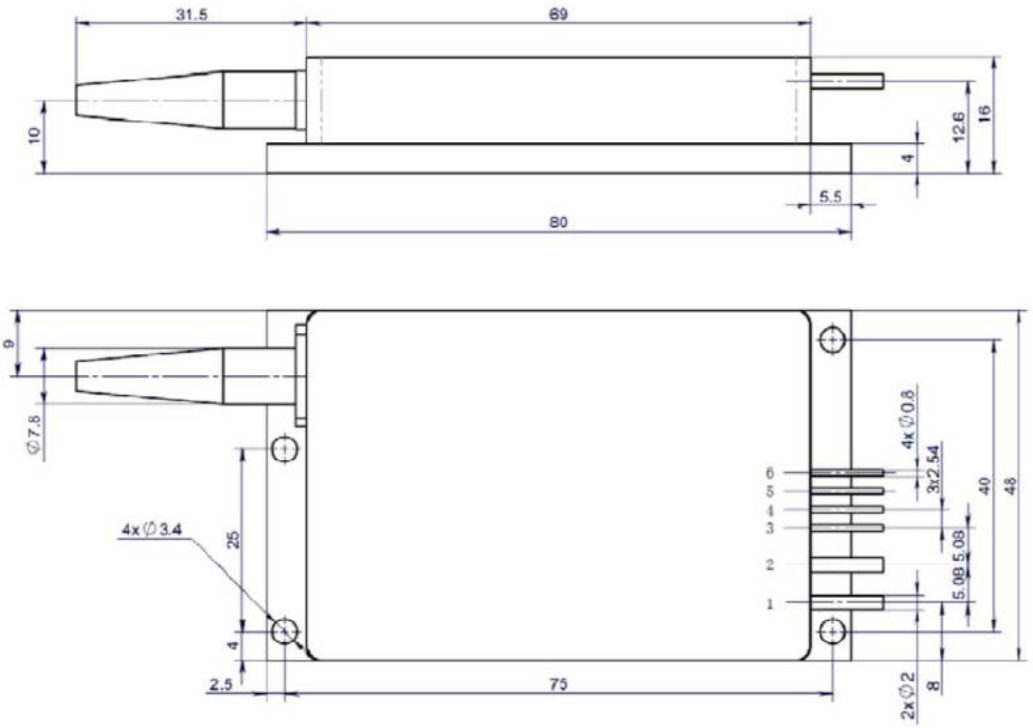

Pin	Function
1	LD (+)
2	LD (-)
3	Thermistor*
4	Thermistor*
5	PD (N) *
6	PD (P) *

* Optional

FRANKFURT LASER COMPANY
An den 30 Morgen 13, 61381 Friedrichsdorf, Germany
Tel.: +49(0)6172.27978-0 Fax: +49(0)6172.27978-10
E-mail: sales@frlaserco.com; Internet: **WWW.FRLASERCO.COM**