Multi(Low)-order Waveplate

Specifications:

1. Material: Quartz
2. Surface Quality: 10/5
3. Wavefront Distortion: <λ/10@633nm
4. Retardation Accuracy: <λ/300
5. Wedge: 1 arc sec
6. Coating: AR/AR, R<0.2% on both sides
7. Thickness: Multi-order T= 0.5~2.0mm;
   Low-order T<0.5mm
8. Clear Aperture: ≥central 90% of diameter

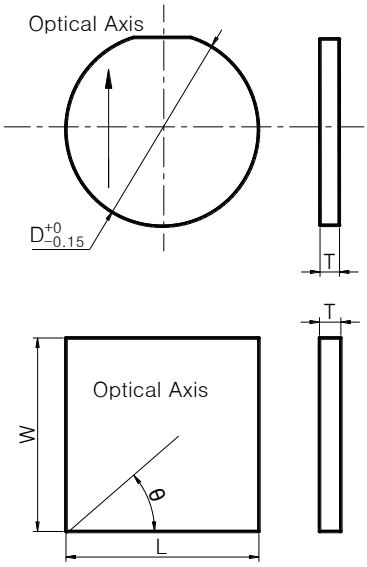

- Product Code:

WPM(WPL)+Material-Size-Retardation-Center Wavelength-θ

Dual Wavelength Waveplate

Specifications:

1. Material: Quartz
2. Surface Quality: 10/5~20/10
3. Wavefront Distortion: <λ/10@633nm
4. Retardation Accuracy: <λ/100
5. Wedge: 1″ arc sec
6. Coating: AR/AR, R<0.2% on both sides
7. Clear Aperture: ≥central 90% of diameter

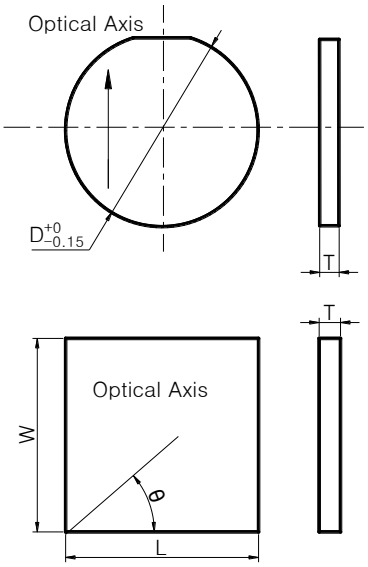

- Product Code:

WPD+Material-Size-Retardation 1-Center Wavelength 1-Retardation 2-Center Wavelength 2-θ

Zero-Order Waveplate

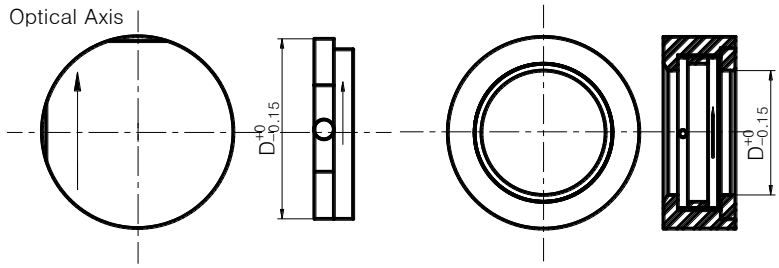

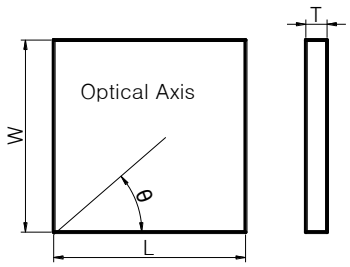

Specifications:

1. Material: Quartz
2. Surface Quality: 10/5~20/10
3. Wavefront Distortion: <λ/10@633nm
4. Retardation Accuracy: <λ/300
5. Wedge: <40 arc sec
6. Coating: AR/AR, R<0.2% on outer sides
7. Clear Aperture: ≥central 90% of diameter

- Produce Code：

WPZ+Material+Type No.-Size-Retardation-Center Wavelength-θ

Type No:

"01"- Cemented Zero-Order

"02"- Airspaced Zero-Order

"03"- True Zero-Order

"04"-Optical Contacted True Zero-Order