SkyAMP - 1030 nm - LP

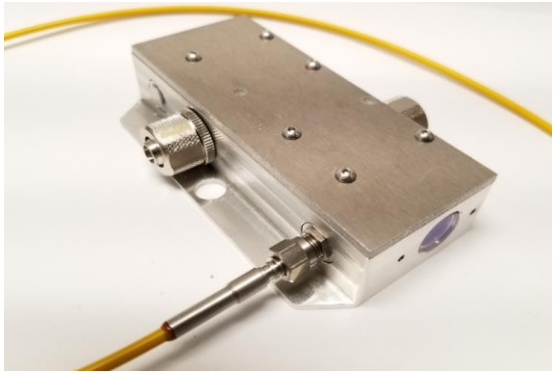

Figure 1: SkyAMP - Single pump port

Features:

-> 1.03 micron amplifier/booster
-> Single mode laser
-> Standard MM pump fiber input
-> Compact and rugged
-> Easy in-line integration
-> Water cooled
-> Standard SMA pump port

		Min	Max		Note
Signal	Input wavelength	1029	1031	nm	
	Input power	1	30	W	
	Input linedwidth	na	3	nm	
	Output wavelength	1029	1031	nm	Centered at XXXX nm for optimal performance
	Output power	na	80	W	Maximum output power depends on input power
	Output linedwidth	na	input	nm	
	Beam diameter	0.8	1	mm	
	Beam quality	Single mode			Output M2 is limited by input M2.
Pump	Center Wavelength	935	945	nm	969 nm pump option.
	Power	na	140	W	
	Linedwidth	1	5	nm	FWHM
	Port return loss	40	na	dB	
	Fiber type	105/125 or 200/220			Core diameter/clad diameter NA:0.22
	Jacket	Loose tube			

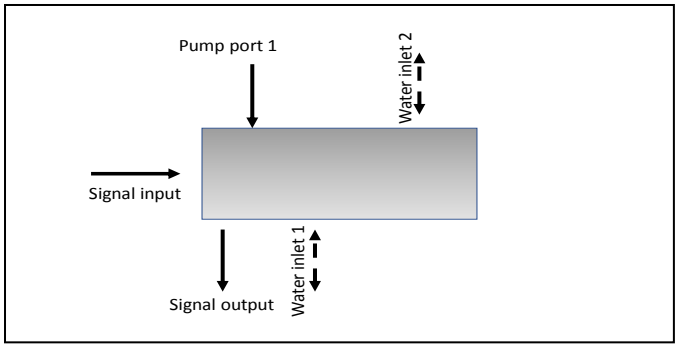

Datasheet 00004 - REV1.0

Proprietary and confidential information - Copyright.

SkyAMP - 1030 nm - LP

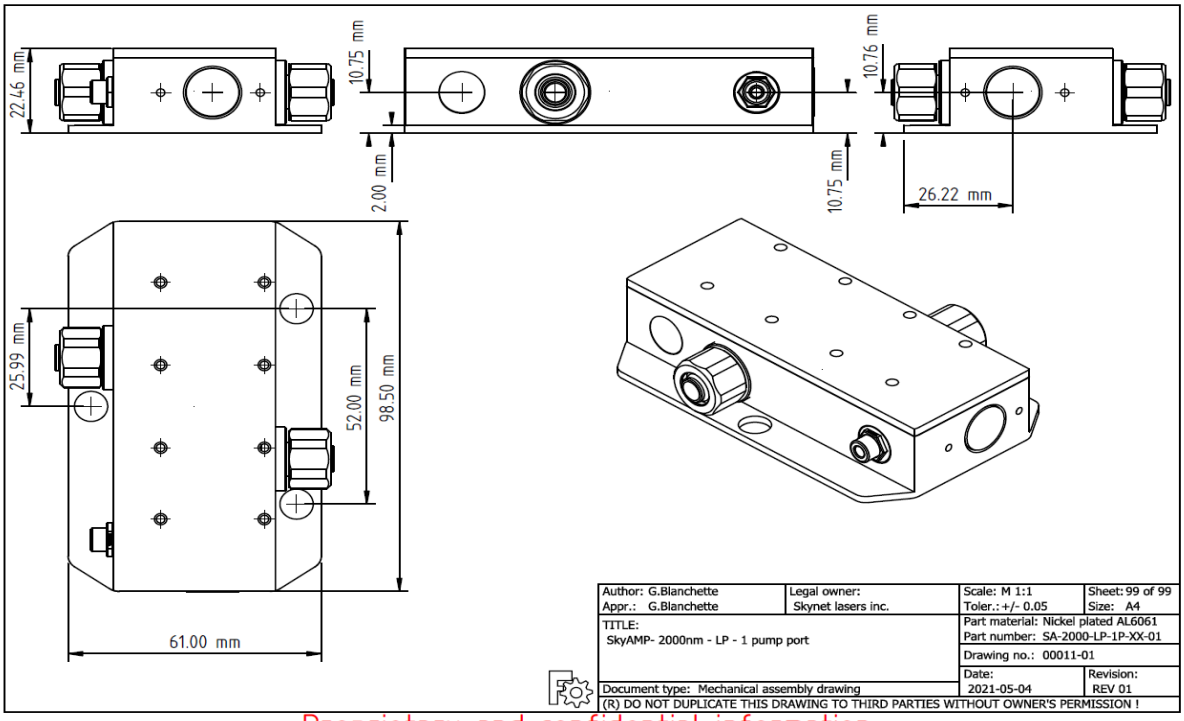

Proprietary and confidential information

Note Water cooling tube fittings compatible with 1/4" tubing

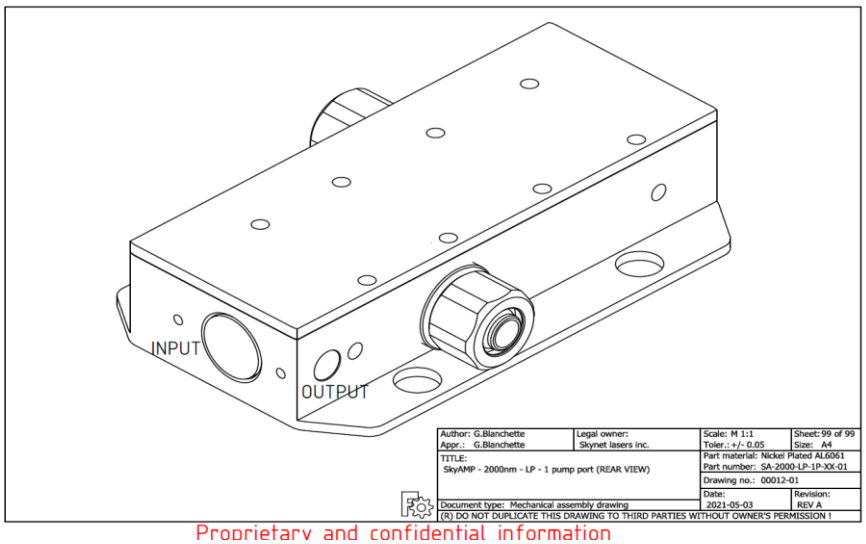

Proprietary and confidential information

Proprietary and confidential information - Copyright.

SkyAMP - 1030 nm - LP

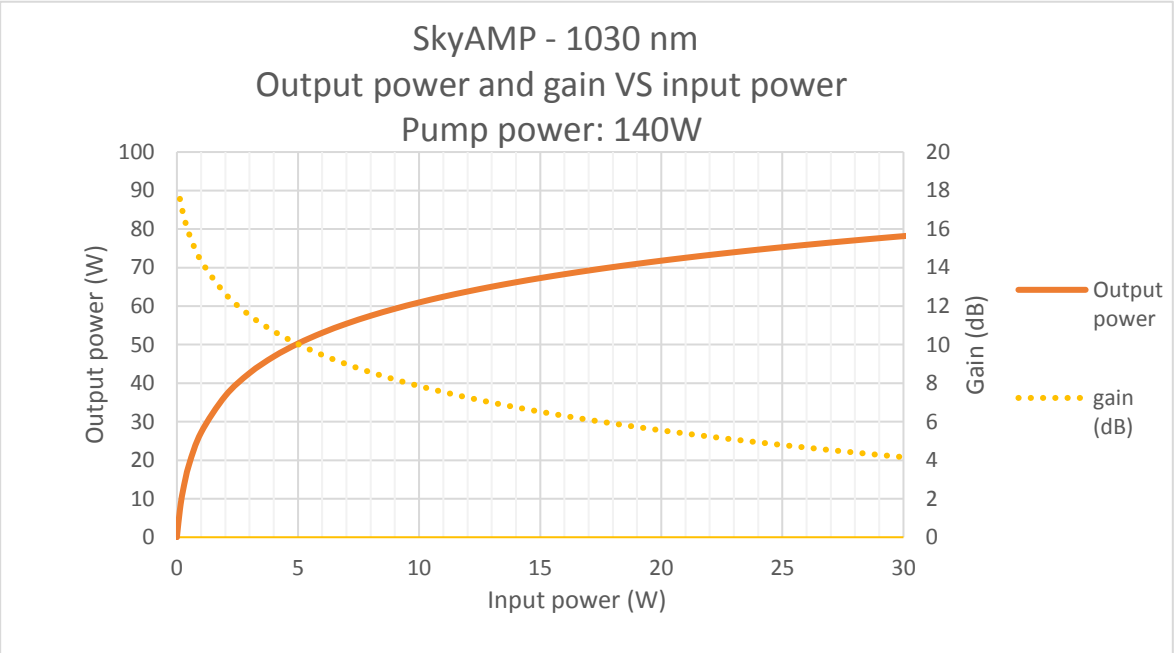

Datasheet 00004 - REV1.0

Proprietary and confidential information - Copyright.