Multi-component gas analysis with speed, repeatability, and reliability.

Rosemount™ Quantum Cascade Laser Analyzers

Ensure unmatched gas analysis performance and realize cost savings with the most advanced technology in the industry.

EMERSON™

Expand Insight and Optimize Performance

Improving productivity, managing emissions, and ensuring quality are daily challenges for operators – and areas of focus for regulators. Changes in processes, regulations, and workforce are pushing engineers, specialists, and technicians in every industry to seek out powerful but easy-to-use technologies that reduce the burden of gas analysis and improve overall operations.

What if you could...

Improve Process Control with Fast, Reliable, Real-time Data

- Multi-component analyzer delivers real-time measurement for greater and faster insight into the process.
- Analysis of up to twelve different gases – in a single instrument – provides broad application flexibility and process insight.
- Solid-state components and unique device package offer unmatched measurement reliability and decades of laser life for improved quality and increased uptime.

Lower Cost with Easy Installation, Operation, and Maintenance

- Modular, simplified design improves reliability, enables easy upgrades, reduces plant maintenance, and simplifies technician's procedures.
- Future-proof analyzer inventory with easy in-field upgrades and maintenance.
- Installation and commissioning ease including one-day technician training and startup.
- Avoid costly shelters and enclosures to reduce install cost and avoid additional field maintenance.

Ensure Safety and Compliance with Superior Reliability

- Sub-second measurements ensure operators can make adjustments to avoid upsets that can develop into emergencies.
- Accurate, reliable measurement of complex gases and emissions ensures regulatory compliance and prevents costly fines.
- Compact and rugged architecture module and field-tested devices for extreme operating environments in regulated industrial markets.

Quantum Cascade & Tunable Diode Laser Analyzers

Emerson's advanced CT4000 and CT5000 Series Analyzers incorporate both Quantum Cascade Laser (QCL) and Tunable Diode Laser (TDL) technology to deliver the most sophisticated industrial gas sensing, analysis, and emission monitoring solution.

Features	Benefits
First hybrid QCL and TDL analyzer	Realize true savings from a more powerful device that gives greater process insight and analysis.
Multiple component measurement in a single device	Detect, analyze, and monitor up to twelve different gases and eliminate the need for multiple analyzers and sample handling systems.
Simple field service and upgrades	Simplify installation, commissioning, upgrades, and any required maintenance with intuitive user interface and all solid-state components.
Reliable operation	Improve uptime with rugged design for extreme environments, and 374 °F (190 °C) maximum sample cell operating temperature.
No consumables	Avoid expense and hassle of high amounts of gas consumables in daily operation.
No costly shelters or enclosures	Lower installation costs with in-the-field wall-mount or rack-mount configurations.
Calibrations seldom required	Reduce the need for validation/calibration frequency with Inherent calibration stability.

Process Industries

- Petrochemical
- Oil and Gas
- Power
- Industrial Energy
- Gas Processing
- Marine
- Research and Development

Typical Applications

- Ethylene Production / Purity
- Continuous Emissions Monitoring
- NOx Reduction / Ammonia Slip
- Natural Gas / Biogas
- Hydrogen / Nitrogen Purity

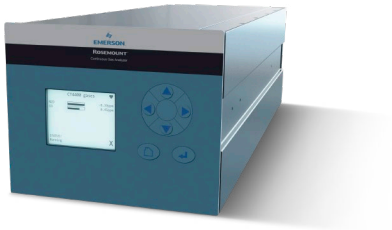

Rosemount CT4400 Continuous Gas Analyzer

Rosemount CT5800 Continuous Gas Analyzer

Rosemount CT5100 Continuous Gas Analyzer

Rosemount CT5400 Continuous Gas Analyzer

Quantum Cascade Laser Technology

Emerson's Quantum Cascade Laser technology offers fast, high resolution spectroscopy to detect and identify a range of molecules in the mid-infrared wavelength range. Coupled with Tunable Diode Laser (TDL) spectroscopy, a single instrument is now able to provide greater insight and monitoring in both the near and mid-infrared range of spectroscopic light.

Quantum Cascade Lasers are semiconductor devices which produce light in the mid-IR region. They are fabricated to emit light at a desired wavelength and are made to scan a spectrum using a laser chirp technique. To start the process, a QCL is pulsed with electrical energy and heats up. As the temperature increases, the wavelength of the emitted light also increases. A laser chirp lasts about one microsecond and in this time a spectrum of between one and three wavenumbers is scanned.

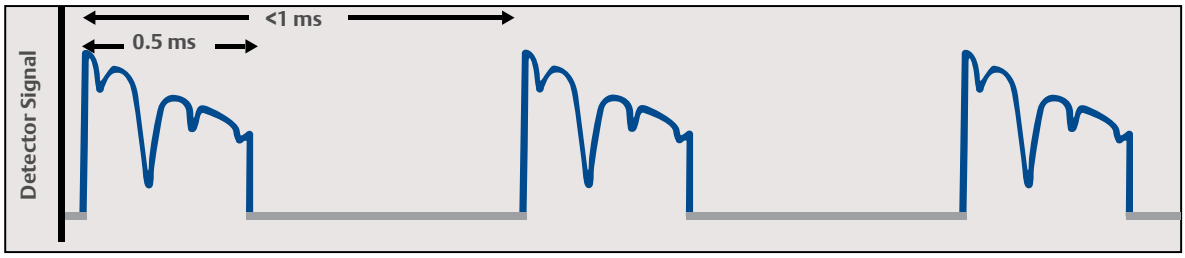

Patented Laser Chirp Technique

The raw detector signal is then processed to convert it into a spectrum from which the concentration of analytes can be calculated. QCLs can be chirped at a frequency of up to 100 KHz, enabling many thousands of spectra to be gathered in a few seconds and processing these spectra gives a strong signal with a good signal-to-noise ratio.

The scanned wavelength region is selected to enable measurement of the desired analytes and it is often possible to detect more than one compound with a single QCL device. An advanced signal processing procedure enables real time validation of measurements and greatly reduces the need for calibrations.

QCL systems include up to six high-resolution lasers to measure both the near- and mid-infrared spectral regions for real-time, optimal gas measurement and analysis down to sub ppm concentrations.

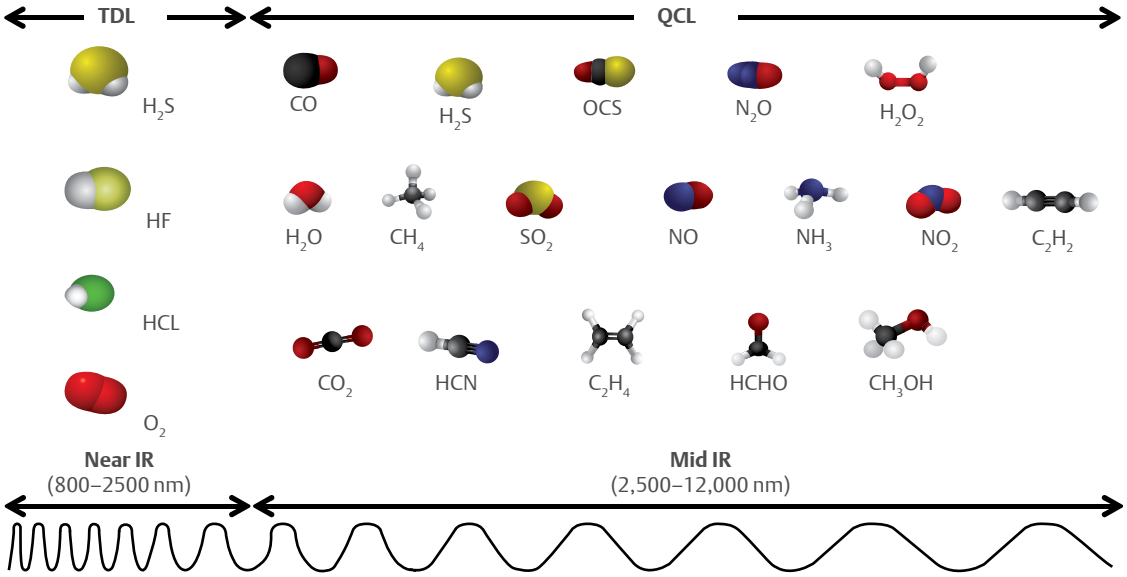

Rosemount™ QCL/TDL technology with patented laser chirp technique expands gas analysis to both the near and mid-infrared range to enhance process insight, improve overall gas analysis sensitivity and selectivity, remove cross interference, and decrease response time.

Simultaneous Gas Analysis

Up to six laser modules and patented laser chirp data capture technique isolates and analyzes up to twelve unique gas components.

1. **Optical bench base plate** – superior rigidity for continuous, high accuracy measurement that is immune to vibration and temperature changes
2. **Smart laser modules** – unique and sequenced laser chirp for fast, multi-component measurement
3. **Optical path mirrors** – direct light, rigid connection to base plate to ensure alignment
4. **Multipass Flow Cell** - designed to extend optical path length for greater resolution of low component (or analyte) concentrations
5. **Detector** - ultrafast detection of emitted light

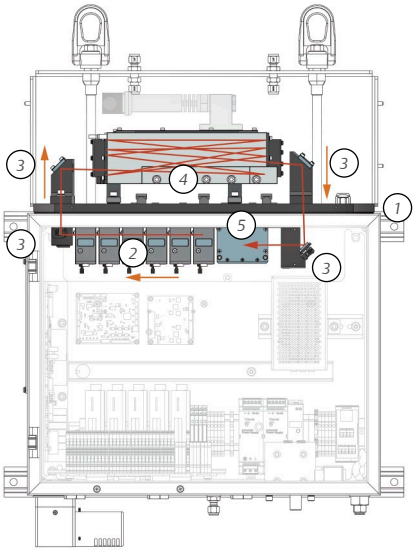

CT5100 Optical Bench

Unmatched Component Detection and Analysis

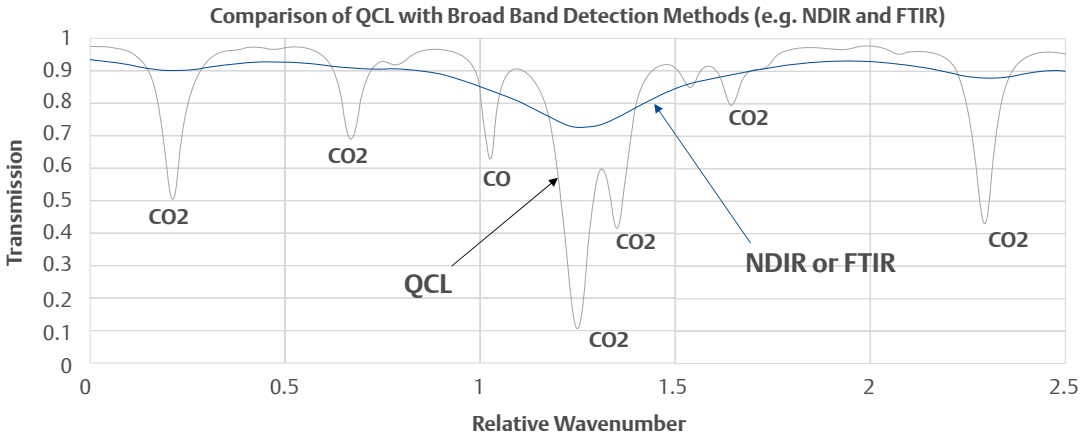

QCL and TDL narrow line width allow scanning of individual peaks of identified components with minimum interference and without filtration, reference cells, or chemometric manipulations.

Rugged, Reliable QCL Laser Module

- Modular architecture is easily serviceable and upgradeable in the field
- Packaged lasers are housed in rugged modules that can be repeatedly mounted/ un-mounted to the optical bench without losing alignment
- Module is preconfigured with its unique characteristics for the QCL device
- Stable dowel mount with two screws and one ribbon cable ensure reliable operation in process environments
- Expert laser light alignment is factory set with no field alignment required

Ethylene Fractionator Control and Real Time Product Certifications

Ethylene is one of the most important organic compounds made in the world today. It is a building-block chemical needed to manufacture many commercial products and is estimated to reach a global manufacturing capacity of 200 million tons by 2020. Approximately half of the world demand for ethylene is for the manufacture of polyethylene but it is also used to make vinyl chloride, ethylbenzene, and many other valuable intermediate products such as ethylene oxide, ethanol ethylene oxide, and ethanol.

What's your challenge?

The goal of an ethylene plant is to produce 99.99 percent pure product. The final purification step is made in an ethylene fractionation tower, or splitter. Analysis is required for process control of the fractionator in order to ensure on-spec production. Once the ethylene product leaves the splitter, its purity must be certified before distribution by pipelines or ships.

What's your opportunity?

What if you could have fast analysis times and high sensitivities to optimize process control of your fractionator tower? What if you could carry out online certification of ethylene product purity in a single analyzer while lowering the total life cycle cost associated with maintaining your system?

Typical Ethylene Fractionator

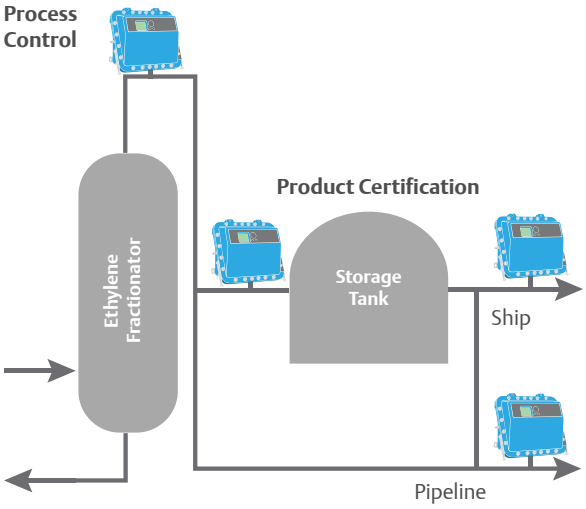

Measurement Ranges

	Measurement Range in Ethylene			
	Components	**Range[1]**	**LOD[2]**	**Units**
Process Control	Methane	0–1000	5	ppmv
	Acetylene	0–20	0.2	ppmv
	Ethane	0–500	5	ppmv
	CO	0–5	0.05	ppmv
	CO_2	0–5	0.05	ppmv
Adders for Product Certification	Ammonia	0–20	0.2	ppmv
	H_2S	0–50	2	ppmv
	Water	0–10	0.1	ppmv
	Methanol	0–100	1	ppmv

[1] Components and ranges are indicative. Analyzer requirements will depend on complete gas list. Detailed specs will be provided during the ordering process.
[2] Repeatability ±1 percent of reading or the Limit of Detection (LOD), whichever is greater.

The Emerson Solution

Rosemount CT5800 Continuous Gas Analyzer

- Measure all your critical acetylene converter components in a single analyzer utilizing multiple QCL/TDL lasers
- Analysis time of approximately five seconds ensures timely delivery of critical information for process monitoring and control
- Unmatched sensitivity detects trace impurities at sub ppm concentrations
- Excellent linearity of response and repeatability
- Being field mountable eliminates the need for expensive analyzer shelters and minimizes sample transport line
- Flameproof enclosure certified for hazardous areas
- Integrated sample handling ensures the gas sample is representative and delivered in a timely manner to the analyzer

Dramatically Lower Operational and Maintenance Costs

- Real-time validation on process samples guarantees performance and minimizes field maintenance intervention
- Inherently stable spectroscopic technique extends calibration intervals to as little as once per year
- Interchangeable modular components for easy field service and configuration
- Remote factory support is available, either by direct connection or by secure file exchange

Best-in-Class Control of your Acetylene Converters

Ethylene is one of the most important organic compounds made in the world today. It is a building-block chemical needed to manufacture many commercial products and is estimated to reach a global manufacturing capacity of 200 million tons by 2020. Approximately half of the world demand for ethylene is for the manufacture of polyethylene but it is also used to make vinyl chloride, ethylbenzene and many other valuable intermediate products such as ethylene oxide, ethanol ethylene oxide, and ethanol.

What's your challenge?

In the cracking process, some molecules are over-cracked into acetylene. An important step to maximize production is to convert acetylene back into ethylene. This is done through the addition of hydrogen in catalytic beds called acetylene converters. Two acetylene converter units are employed: one in service and one on stand-by. Analytical data are required for the inlet stream, mid-bed, and outlet streams of acetylene converters in order to optimize conversion and avoid process excursions.

What's your opportunity?

What if you could measure all your critical components in a single analyzer? What if you could have fast analysis times, and high sensitivities to optimize your process control applications while lowering the total life cycle cost associated with maintaining your analyzers?

Acetylene Converter Process

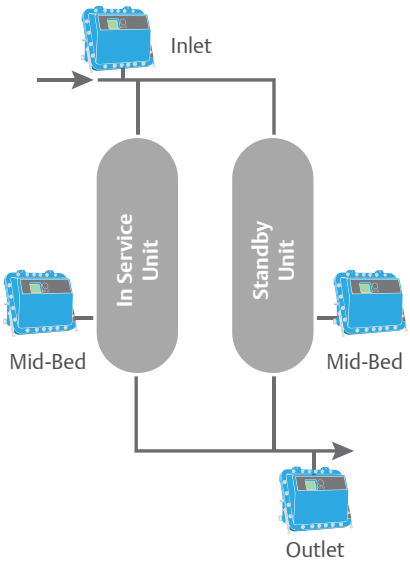

Measurement Ranges

Typical Measurements - Inlet			
Component	**Range**[1]	**LOD**[2]	**Units**
Acetylene	0–0.5	0.01	Mol %
Ethylene	0–60	0.6	Mol %
Ethane	0–30	0.3	Mol %

Typical Measurements - Mid-Bed			
Component	**Range**[1]	**LOD**[2]	**Units**
Acetylene	0–500	5	ppmv

Typical Measurements - Outlet			
Component	**Range**[1]	**LOD**[2]	**Units**
Acetylene	0–50	0.1	ppmv
Response time less than 10 seconds			

[1] Components and ranges are indicative. Detailed specs will be provided during the ordering process.
[2] Repeatability ±1 percent of reading or the Limit of Detection (LOD), whichever is greater.

The Emerson Solution

Rosemount CT5800 Continuous Gas Analyzer with Integrated Sample Handling

- Measure all your critical acetylene converter components in a single analyzer utilizing multiple QCL/TDL lasers
- Analysis time of approximately five seconds ensures timely delivery of critical information for process monitoring and control
- Unmatched sensitivity detects trace impurities at sub ppm concentrations
- Excellent linearity of response and repeatability
- Being field mountable eliminates the need for expensive analyzer shelters and minimizes sample transport line
- Flameproof enclosure certified for hazardous areas
- Integrated sample handling ensures the gas sample is representative and delivered in a timely manner to the analyzer

Dramatically Lower Operational and Maintenance Costs

- Real-time validation on process samples guarantees performance and minimizes field maintenance intervention
- Inherently stable spectroscopic technique extends calibration intervals to as little as once per year
- Interchangeable modular components for easy field service and configuration
- Remote factory support is available, either by direct connection or by secure file exchange

Continuous Emissions Monitoring

Regulatory requirements to monitor and report emissions are a necessary practice for global industries. However, understanding evolving regulatory standards changes and options about technologies to monitor the emission of gaseous and particle pollutants can be a challenge. Continuous emissions monitoring systems (CEMS) help ensure compliance and, with highly accurate and reliable instrumentation, can even further improve the overall performance and insight into an operation.

What's your challenge?

Environmental legislation continues to evolve and sets stricter limits on a range of atmospheric pollutants. Operators are challenged to ensure CEMS analyzers are reporting accurately to prevent costly fines or unexpected shutdowns.

What's your opportunity?

Rosemount's QCL/TDL technology delivers superior emissions monitoring coverage with high reliability and low maintenance that assure greater analyzer availability.

Typical CEMS Process

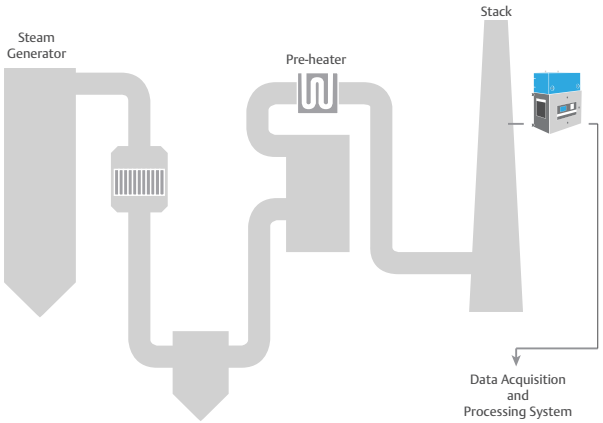

Measurement Ranges

	Measurement Range		
Component	**Range [1]**	**LOD [2]**	**Units**
NO	0–20	0.2	ppm vol
NO_2	0–20	0.2	ppm vol
NH_3	0–13.3	0.1	ppm vol
CO	0–20	0.2	ppm vol
CO_2	0–25	0.1	% vol
SO_2	0–50	0.5	ppm vol
H_2O	0–25	0.02	% vol
O_2	0–25	0.05	% vol

[1] Components and ranges are indicative. Detailed specs will be provided during the ordering process.
[2] Repeatability ±1 percent of reading or the Limit of Detection (LOD), whichever is greater.

QCL Benefits for Continuous Emission Monitoring Systems (CEMS)

Rosemount QCL/TDL-based CEMS offers a unique and field-proven system to monitor up to twelve critical components gases and potential pollutants to ensure compliance and improved, overall operations.

- Robust, accurate CEMS delivers the speed and reliability operators demand to ensure global, national, state, and local level compliance
- Hybrid, multi-component QCL/TDL system offers the most comprehensive analysis available for detecting a range of components in both the near and mid-infrared spectral range
- Patented laser chirp technique is used to identify and record thousands of measurements every second and ensures repeatable monitoring of emissions
- Unmatched reliability and accuracy of emissions
- No consumables or regular calibration required reducing costs and simplifying maintenance
- Easy and infrequent maintenance with auto validation and/or calibration
- Sample temperature up to 374 °F (190 °C) to keep hot/wet sample above acid dew point when required

Recommended Technology

Rosemount CT5100. Purged and pressurized enclosure for hazardous areas.

Rosemount CT4400. Half-rack enclosure for safe areas. Ideal for applications measuring standard components.

Rosemount CT5400. 19-in. rack enclosure for safe areas. Ideal for applications requiring measurement of a large suite of gases.

- Simultaneous multi-component measurement
- Accurate and sensitive gas measurements
- Excellent linearity of response and repeatability
- Low, long term drift, extends calibration intervals
- Low maintenance and low lifetime costs
- Continuous health diagnostic reporting
- Intuitive, simple front panel user interface allows access to all instrument functions

NOx Reduction – Ammonia Slip

Nitrogen oxides (NOx) result from the combustion process in turbines, crackers, combustion engines, boilers, and other locations within a plant. As a powerful pollutant, it is important to control and contain NOx emissions. Both Selective catalytic/non-catalytic reduction (SCR and SNCR) are techniques used worldwide to remove NOx. However, this process can result in a by-product of unreacted ammonia or ammonia slip. Continuous measurement and monitoring of ammonia slip can be a challenge to ensure sample integrity is maintained – especially in high dust, high-temperature applications.

What's your challenge?

To adhere to environmental guidelines, operators must balance using the precise amount of ammonia – too much results in waste, not enough can lead to emissions.

What's your opportunity?

Capable, fast Rosemount QCL/TDL technology delivers the needed measurement precision (0–100 ppm) to ensure production is at its optimum and avoid overdosing issues that result in both economic and environmental problems and cost.

Typical NOx Reduction Process

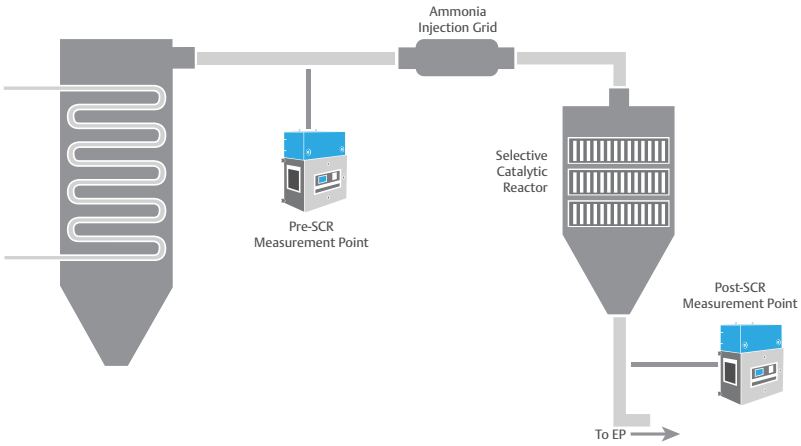

Measurement Ranges

		Measurement Range		
Location	Component [1]	Range	LOD [2]	Units
POST SCR	NO	0–300	0.3	ppm vol
	NO_2	0–150	0.2	ppm vol
	NH_3	0–15	0.15	ppm vol
	SO_2	0–1000	1	ppm vol
	O_2	0–21	0.02	% vol
PRE SCR	NO	0–700	0.5	ppm vol
	NO_2	0–300	0.3	ppm vol
	CO	0–1000	1	ppm vol
	O_2	0–20	0.02	% vol

[1] Components and ranges are indicative. Detailed specs will be provided during the ordering process.
[2] Repeatability ±1 percent of reading or the Limit of Detection (LOD), whichever is greater.

QCL Benefits for NOx Reduction and Ammonia Slip Detection

Rosemount Quantum Cascade Lasers deliver the needed measurement precision.

- Interference-free monitoring of the presence of ammonia slip in the toughest environments
- Patented laser chirp technique scans the absorption spectrum enabling highly reliable and repeatable measurement of each component
- Laser accuracy, sensitivity, and linearity
- Ammonia slip detection and insight into the efficiency of the plant's NOx reduction system resulting from real-time measurement and analysis
- Rugged, modular design delivers outstanding reliability and measurement stability in extreme operations
- Monitor up to twelve critical component gases for all industrial applications, toxic gas detection, and plant-wide emissions monitoring
- No consumables or regular calibration required reducing costs and simplifying maintenance

Recommended Technology

Rosemount Continuous Gas Analyzers with Integrated Sample Handling System

Rosemount CT5100. Purged and pressurized enclosure for hazardous areas.

Rosemount CT5400. 19-in. rack enclosure for safe areas. Ideal for applications requiring measurement of a large suite of gases.

Rosemount CT4400. Half-rack enclosure for safe areas. Ideal for applications measuring standard components

Natural Gas Quality

As sources of natural gas become more diversified (e.g. shale gas, LNG, and bio-gas), operators must be able to ensure the composition of gas delivered – and received – is of sufficient quality per contractual agreements and pipeline quality and safety requirements. The increasing variability of the gas quality means that there is a greater need to measure the gas contaminants fast and accurately, often in remote locations with no on-site operators or maintenance personnel.

What's your challenge?

Operators must be able to ensure the composition of gas delivered – and received – is of sufficient quality per contractual fiscal agreements, pipeline requirements, and safety considerations.

What's your opportunity?

Rosemount QCL/TDL provides rapid, reliable, high accurate measurement to ensure natural gas meets quality standards and specifications, does not contain impurities that react and can corrode pipelines, and avoids any combustion or safety concerns downstream.

Typical Natural Gas Chain of Custody

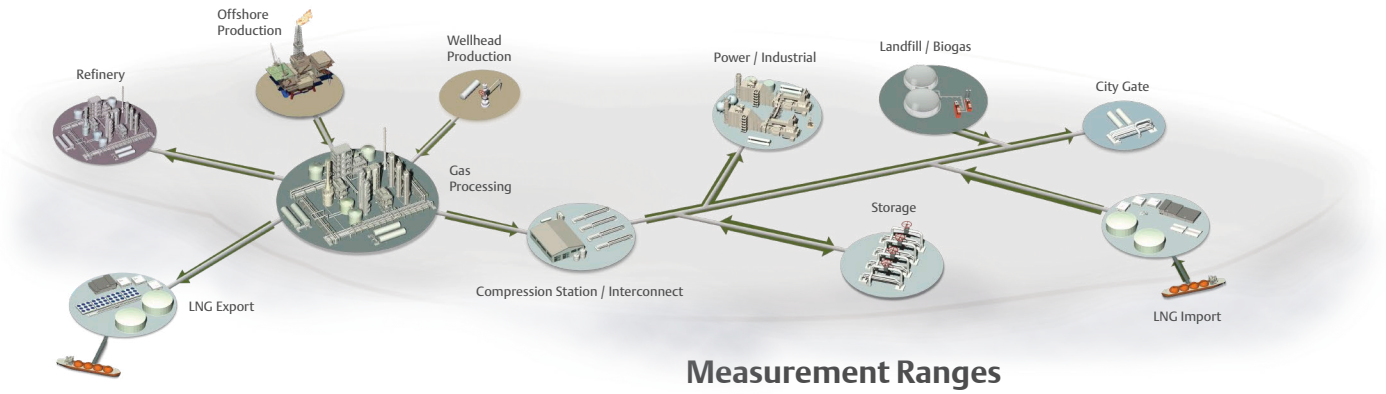

Measurement Ranges

	Typical Measurements - Outlet		
Component	**Range[1]**	**LOD[2]**	**Units**
H_2O	0–2500	5.0	ppm vol
CO_2	0–20	0.04	% vol
H_2S (typical)	0–100	2.5	ppm vol
H_2S (extended)	0–5000	2.5	ppm vol

[1] Components and ranges are indicative. Detailed specs will be provided during the ordering process.
[2] Repeatability ±1 percent of reading or the Limit of Detection (LOD), whichever is greater.

Applications

- Offshore/Onshore Production Sites
- Gas Processing
- Custody Transfer Points
- Storage Facilities
- Distribution Network
- Biogas

QCL Benefits for Natural Gas Quality

Natural gas is required to meet stringent quality controls to satisfy fiscal and contractual obligations and ensure safe transportation. Rosemount Quantum Cascade Lasers offer fast and reliable monitoring of natural gas impurities to ensure quality standards are met and to avoid problems within the process or downstream.

- Rapid, indirect, and interference-free surveillance and detection of H_2O, H_2S, and CO_2 in the natural gas stream
- Unmatched sensitivity and real-time measurement detect a variety of components and impurities, including complex mixtures and changes in methane levels
- Patented laser chirp technique analyzes natural gas continuously down to low ppm concentrations, to provide sub-second measurements
- Outstanding reliability and stability in the most extreme of conditions and operations
- No consumables or regular calibration required reducing costs and simplifying maintenance
- Easy-to-use instrumentation and fast technician training

Recommended Technology

Rosemount CT5800 Continuous Gas Analyzer

- Unique cell design delivers highly accurate measurement of low concentrations of impurities in gas streams
- Designed for up to six Quantum Cascade Lasers
- Multi-component and simultaneous measurement in a single gas analyzer
- Flameproof enclosure for hazardous area applications

Hydrogen / Nitrogen Purity

Assuring hydrogen and nitrogen gas purity is critical across multiple processing industries and applications. For several key processes, the purity of the gas must be precisely monitored and controlled to ensure the product is within specification and avoid damage to equipment or process line. The purity of these gases also plays an important role in controlling reactions and reactor performance, avoiding contaminating valuable catalysts, and ensuring the efficiency of the synthesis process and resulting product quality.

What's your challenge?

The success and profitability of many gas processing industries and applications relies on the accurate and reliable detection and removal of gas impurities in each stage of the reaction process.

What's your opportunity?

Rosemount QCL/TDL technology delivers extremely fast and highly accurate identification and analysis of gas impurities in a single analyzer instrument.

Typical H_2 Purity Process

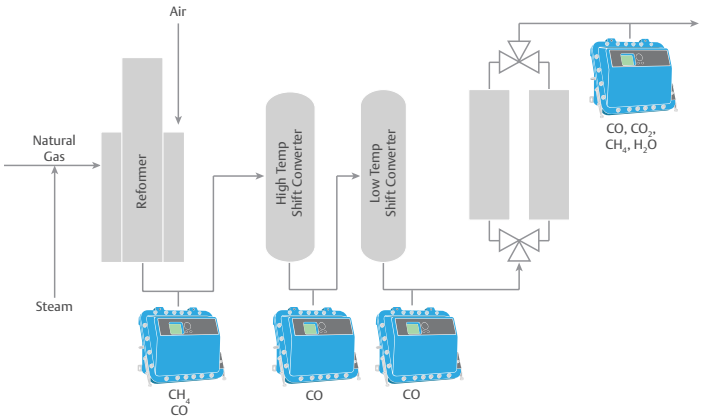

Measurement Ranges

	Measurement Range		
Component	Range [1]	Units [2]	LOD
CO	0–5	ppm vol	0.05
CO_2	0–5	ppm vol	0.02
H_2O	0–10	ppm vol	0.1
CH_4	0–50	ppm vol	0.5
NH_3	0–10	ppm vol	0.05

[1] Components and ranges are indicative. Detailed specs will be provided during the ordering process.
[2] Repeatability ±1 percent of reading or the Limit of Detection (LOD), whichever is greater.

QCL Benefits for Hydrogen / Nitrogen Purity

The use of high-purity hydrogen and nitrogen gases is vital to avoid equipment plugging and resulting damage, ensure proper catalyst integrity and reactions, and achieve improved process performance. Rosemount QCL/TDL lasers deliver real-time monitoring performance using a single analyzer device for increased process efficiency and minimized cost.

- Multiple QCL/TDL lasers in a single analyzer for ultrafast detection and analysis of NH_3, CO, and CO_2, methane, and moisture
- Analysis time of <1 second delivers critical purity monitoring and identification performance
- Unmatched sensitivity and real-time measurement detect a variety of components and impurities, even in complex mixtures
- Patented laser chirp technique analyzes natural gas continuously down to low ppm concentrations, to provide sub-second measurements
- No consumables or regular calibration required reducing costs and simplifying maintenance
- Easy-to-install instrumentation and fast technician training

Recommended Technology

Rosemount CT5800 Continuous Gas Analyzer

- Unique cell design delivers highly accurate measurement of low concentrations of impurities in gas streams
- Designed for up to six Quantum Cascade Lasers
- Multi-component and simultaneous measurement in a single gas analyzer
- Ideal for nitrogen stream and hydrogen stream purity applications
- Flameproof enclosure for hazardous area applications

Specifications

Specifications	CT4400	CT5100	CT5400	CT5800
For a complete list of product specifications, please refer to the individual product data sheets.				
Area Certification	General purpose – safe area analyzer	North America: Class I, Division 2 Groups A, B, C, D, T3 Europe: ATEX II 3G Ex p Group IIC T3	General purpose – safe area analyzer	Europe: ATEX II 2G Ex d IIB+H2 T4 North America: Class I, Division 2, Groups B, C, D, T4
Performance				
Repeatability	±1% of reading	±1% of reading	±1% of reading	±1% of reading
Linearity	$R^2 > 0.99$	$R^2 > 0.999$	$R^2 > 0.999$	$R^2 > 0.999$
Measurement Rate	1 Hz (up to 10 Hz on request)	1 Hz (up to 10 Hz on request)	1 Hz (up to 10 Hz on request)	1 Hz (up to 10 Hz on request)
Environmental				
Ambient Temperature	41 to 122 °F (5 to 50 °C) ±1% per 5 °C	-4 °F to 131 °F (-20 °C to 55 °C)	32 °F to 113 °F (0 °C to 45 °C)	-4 °F to 131 °F (-20 °C to 55 °C)
Sample Gas Temperature	59 °F to 122 °F (15 °C to 50 °C)	Up to 374 °F (190 °C) factory set	Up to 374 °F (190 °C) factory set	39 °F to 140 °F (4 °C to 60 °C)
Humidity Range	10–95%, Non-condensing	10–95%, non-condensing	10–95%, non-condensing	10–95%, non-condensing
Protection Class	n/a	IP66/NEMA 4X (main enclosure)	n/a	IP66/NEMA 4X
Communications				
Analog Signal Out	4–20 mA (1 per measurement)	4–20 mA (1 per measurement)	4–20 mA (1 per measurement)	4–20 mA (1 per measurement)
Protocols	Modbus® (over Ethernet TCP/IP™, RS-232 or RS485)	Modbus (over Ethernet TCP/IP, RS-232 or RS485)	Modbus (over Ethernet TCP/IP, RS-232 or RS485)	Modbus (over Ethernet TCP/IP, RS-232 or RS485)
Inlet Gas Connector	¼ in. (6 mm) Swagelok® type	¼ in. (6 mm) Swagelok type	¼ in. (6 mm) Swagelok type	¼ in. (6 mm) Swagelok type
Outlet Gas Connector	¼ in. (6 mm) Swagelok type	¼ in. (6 mm) Swagelok type	¼ in. (6 mm) Swagelok type	¼ in. (6 mm) Swagelok type
Utilities				
Power Supply	100–240 Vac, 50/60 Hz	110 VAC 60 Hz / 240 VAC 50 Hz	110 VAC 60 Hz / 240 VAC 50 Hz	120 VAC 60 Hz / 240 VAC 50 Hz 200 V/A
Mechanical				
External Dimensions (Nominal)	Half-rack: 8.5 x 24.5 x 6.8-in. (215 x 623 x 172 mm) Full-rack (including handles): 19 x 25.9 x 6.8-in. (482.6 x 658 x 172 mm)	22.68-in. x 11.7-in. x 30.94-in. (575 mm x 298 mm x 786 mm)	19-in. x 26.5-in. x 8.7 in. (482.6 mm x 673 mm x 221.5 mm)	Closed: 27.34-in. x 11.5-in. x 20.28-in. (694.5 mm x 292 mm x 515 mm) Open: 27.34 in. x 11.5 in. x 41.24-in. (694.5 mm x 292 mm x 1047.5 mm) Opening radius: 21.46-in. (545 mm)
Weight	Half-rack: 33.1 lbs. (15 kg) Full-rack: 66.1 lbs. (30 kg)	117 lbs. (53 kg)	68.34 lbs. (31 kg)	176.37 lbs. (80 kg)
Installation	19-in. Rack Mount or Half 19-in. Rack Mount	Wall Mount	19 in. Rack Mount	Wall Mount

Additional Services and Support

Engineered Sample Handling Systems

Process gas analyzers are only as good as the quality of the sample they measure. Tested rigorously before shipment, Emerson provides custom engineered sample handling systems designed to meet the application's specifications.

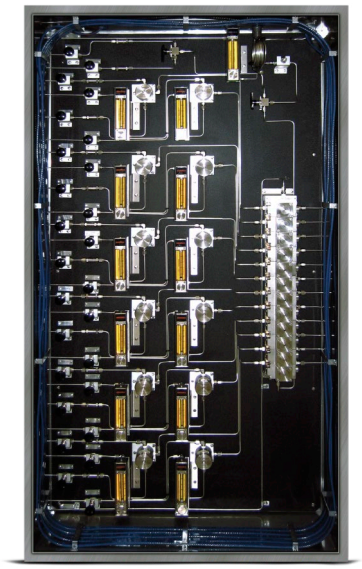

Lifecycle Services & Support

Our team of trained and certified field experts know and understand the requirements needed to develop a customized service program to suit your application. We provide complete turn-key services and problem solving to assist you every step of the way. From pre-installation services to on-going maintenance and support long after commissioning, we have the expertise to ensure your Rosemount analyzers run at ideal operating conditions during its lifecycle.

Field services include, but are not limited to the following:

- Startup and commissioning
- Scheduled maintenance
- On-site support
- Field retrofits
- Training

Training Services

Whether your goal is to reduce maintenance costs, maximize up-time, or reduce lost and unaccounted for gas running through the pipeline, Emerson offers a complete list of training courses and continuous support programs to ensure your technicians know how to properly operate and maintain the analyzer during its lifecycle.

Our certified instructors offer two types of training courses:

Standard Training programs are scheduled periodically throughout the year at one of our four training facilities. Each course varies in length, typically lasting between four to eight hours a day for a period of four days, depending on the course level and student knowledge and experience. These classes are designed to expand a student's knowledge, covering such topics as how to properly configure the instruments to meet the plant's monitoring and control needs, how to properly calibrate and care for them, and how to use diagnostic variables to troubleshoot problems and schedule routine maintenance.

Private Training classes can also be arranged at an off-site location depending on availability and training location requested. Training is conducted in both a formal classroom setting and a hands-on instructional approach to give customers a complete training program customized to their specific needs and interests.

All standard and private training courses are taught by Emerson certified instructors who work with each student to provide the necessary hands-on training, theory, and conceptual knowledge needed to perform on-the-job functions safely and accurately.

The instructor will prepare a course curriculum designed around the student's skill level and expertise, often covering everything from installation and startup, all the way through commissioning and long-term maintenance within the same class. For the more experienced student, advanced training courses are available. Typical students who attend our training program include plant personnel, analytical technicians, and field service engineers.

Quantum Cascade Laser Analyzers. Fast, high-resolution gas sensing for real-time insights into your process.

Rosemount™ CT5100

Rosemount™ CT5800

Rosemount™ CT4400

Rosemount™ CT5400

ROSEMOUNT™

Emerson Automation Solutions Americas
10241 West Little York, Suite 200
Houston, Texas 77040
USA
Toll Free + 866 4 223 683
T + 713 396 8880
F + 713 466 8175
QCL.CSC@Emerson.com

Emerson Automation Solutions Europe
Cascade Technologies
Glendevon House
Castle Business Park
Stirling, FK9 4TZ
Scotland
T + 44 1786 447 721
F + 44 1786 475 822
QCL.CSC@Emerson.com

Emerson FZE Middle East & Africa
Jebel Ali Free Zone
Dubai, UAE
P.O. Box 17033
T + 971 4 811 8100
F + 971 4 886 5465
QCL.CSC@Emerson.com

Emerson Automation Solutions Asia Pacific
Asia Pacific Private Ltd
1 Pandan Crescent
Singapore 0512
Singapore
T + 65 777 8211
F + 65 777 0947
QCL.CSC@Emerson.com

Facebook.com/Rosemount
YouTube.com/user/Rosemount
Twitter.com/Rosemount_News

00803-0100-4511_RevAB

EMERSON™

CONSIDER IT SOLVED™