Windows
Mirrors
Partial Reflectors
Non-Polarizers
Polarizers
Waveplates
Dichroic Filters
Lenses
Prisms

Optics Tutorial
Material Data
RMI Standard Specs

Prisms » Right Angle Prisms

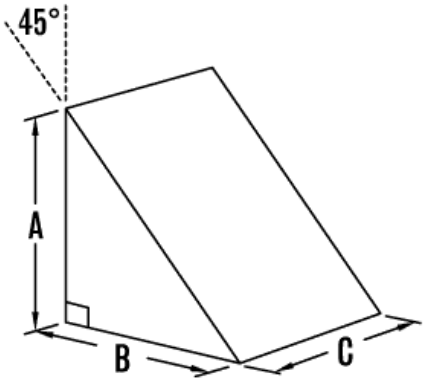

Right Angle Prisms are well suited for beam deviation and retro-reflection. They are often preferable to plane mirrors, because they are easier to mount and align.

High throughput is attained when the hypotenuse is used in total internal reflection (TIR), and the entrance and exit surfaces are anti-reflection coated. An incident beam normal to the entrance surface is reflected at a 90° angle, and mages are inverted.

The hypotenuse may also be used in external reflection, in which case it is coated with a metal or dielectric, high reflectance coating. Right angle prisms may also be used for retro-reflection. A beam entering perpendicular to the hypotenuse is reflected by the legs and emerges parallel to itself. If it is desirable to use either the hypotenuse or the legs in internal reflection mode, but field angle requirements exceed TIR acceptance limits, or if the environment in which the prism is to be used does not allow the hypotenuse to be kept sufficiently clean for TIR, a metal or dielectric coating can be applied to the hypotenuse.

RMI Standard Specifications

Materials:	BK7, UVFS, FS, SF2 CaF_2,
Surface Figure: BK7, UVFS, FS, SF2: CaF_2:	All polished surfaces: λ/20 at 633 nm λ/4 at 633 nm
Surface Quality: BK7, UVFS, FS, SF2: CaF_2:	All polished surfaces: 10-5 20-10
Dimensions:	A=B=C
Dimensional Tolerance:	+ 0.000", – 0.010"
Angular Deviation:	≤ 3 arc minutes
Bevels:	0.010" – 0.030" at 45º
Clear Aperture:	Exceeds central 85% of diameter

More Prisms