Optizone

In-line Faraday Rotator

Features

High Return Loss
High Extinction Ratio
Low Insertion Loss
Excellent Environmental Stability

Applications

Fiber Sensor
Fiber Amplifier
Fiber Lasers
Research

Specifications

Parameters	Unit	Values
Center Wavelength (λc)	nm	1310, 1480 or 1550
Operating Wavelength Range	nm	±20
Typ. Insertion Loss	dB	0.3
Max. Insertion Loss	dB	0.5
Min. Return Loss	dB	50
Min. Extinction Ratio (Slow Axis of Port 1 is aligned to Slow Axis of Port 2, for PM-PM Type, at 23°C)	dB	20
Min. Extinction Ratio (Slow Axis of Port 2 is aligned to Fast Axis of Port 1, for PM-PM Type, at 23°C)	dB	20
Rotation Angle at 23 deg, λc	Degree	45±1
Max. Optical Power (CW)	mW	500
Max. Tensile Load	N	5
Operating Temperature	°C	-5 to +70
Storage Temperature	°C	-40 to +85

*Above specifications are for devices without connectors.
*For devices with connectors, IL will be 0.3dB higher, RL will be 5dB lower and ER will be 2dB lower.
*The PM fiber and the connector key are aligned to the slow axis.

Package Dimensions

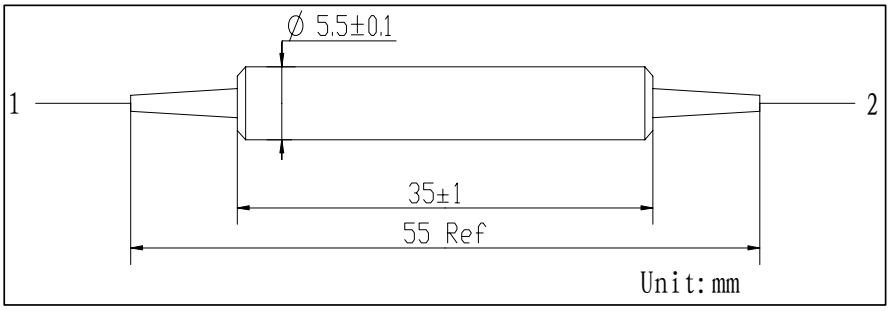

Ordering information

ILF-①①-②②-③③-④④-⑤

①①: Wavelength
31 - 1310nm
48 - 1480nm
55 - 1550nm
SS - Specify

②②: Connector Type on Port 1 & 2
1 - FC/UPC
2 - FC/APC
3 - SC/UPC
4 - SC/APC
N - None
S - Specify

③③: Fiber Jacket on Port 1 & 2
B - 250um Bare Fiber
D - 400um Bare Fiber
L - 900um Loose Tube
S - Specify

④④: Fiber Type on Port 1 & 2
1 - PM Panda Fiber
2 - SMF-28e Fiber

⑤: Fiber Length
0.8 - 0.8m
S - Specify

Optizone In-line Polarizer

Features

High Extinction Ratio
Low Insertion Loss
High Return Loss

Applications

Communication Systems
Test Instrumentations
Fiber Sensors
Research

Specifications

Parameters	Unit	Values
Center Wavelength	nm	1310, 1480 or 1550
Operating Wavelength Range	nm	±50
Typ. Insertion Loss at 23°C	dB	0.3
Max. Insertion Loss at 23°C	dB	0.5
Min. Return loss	dB	50
Typ. Extinction Ratio at 23°C（Input to Output）	dB	30
Min. Extinction Ratio at 23°C（Input to Output）	dB	28
Min. Extinction Ratio at 23°C（Output to Input）	dB	23(Only for PM Fiber on Input Port)
Min.PDL(Only for SMF on all ports)@23°C	dB	25
Max. Optical Power (CW)	mW	500（Based on proper polarization alignment)
Max. Tensile Load	N	5
Fiber Type		PM Panda Fiber or SMF-28e
Operating Temperature	°C	-5 to +70
Storage Temperature	°C	-40 to +85

*Above specifications are for devices without connectors.

*For devices with connectors, IL will be 0.3dB higher, RL will be 5dB lower and ER will be 2dB lower.

*The PM fiber and the connector key are aligned to the slow axis.

Package Dimensions

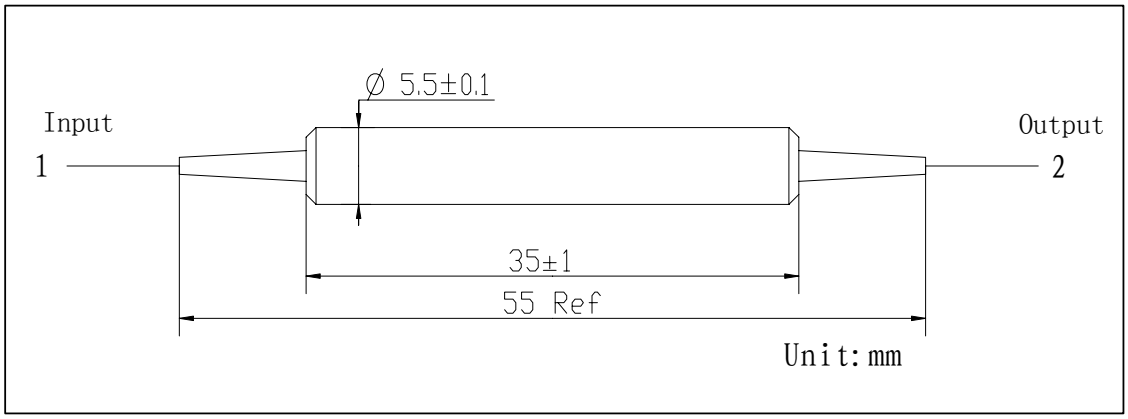

Ordering information

ILP-①①-②②-③③-④④-⑤

①①: Wavelength
31 - 1310nm
48 - 1480nm
55 - 1550nm
SS - Specify

②②: Connector Type on Port 1 & 2
1 - FC/UPC
2 - FC/APC
3 - SC/UPC
4 - SC/APC
N - None
S - Specify

③③: Fiber Jacket on Port 1 & 2
B - 250um Bare Fiber
D - 400um Bare Fiber
L - 900um Loose Tube
S - Specify

④④: Fiber Type on Port 1 & 2
1 - PM Panda Fiber
2 - SMF-28e Fiber

⑤: Fibre Length
0.8 - 0.8m
S - Specify

Isolator Polarization Beam Combiner/Splitter

Optizone

Features

Compact High Performance
High Extinction Ratio
Low Insertion Loss
High Directivity

Applications

Polarization Mode Dispersion Compensator
EDFA & Raman Amplifier
Coherent Telecommunication Systems
Fiber Optic Sensor

Specifications

Parameter	Unit	Values	
Stage		Single stage	Dual stage
Center Wavelength	nm	1310, 1480 or 1550	
Operating Wavelength Range	nm	±40	
Typ. Insertion loss	dB	0.45	0.55
Max. Insertion loss	dB	0.7	0.8
Typ. Isolation	dB	38	52
Min. Isolation @23℃	dB	20	42
Min. Extinction Ratio (for Splitter only)	dB	20	20
Min. Return Loss	dB	50	
Min. Directivity	dB	50	
Max. Optical Power (CW)	mW	500	
Max. Tensile Load	N	5	
Fiber Type		PM Panda Fiber on Port 1 and 2, SMF-28e Fiber or PM Panda Fiber on Port 3	
Operating Temperature	℃	-5 to +70	
Storage Temperature	℃	-40 to +85	

*Above specifications are for device without connector.
*For devices with connectors, IL will be 0.3dB higher, RL will be 5dB lower and ER will be 2dB lower.
*The PM fiber and the connector key are aligned to the slow axis.

Package Dimensions

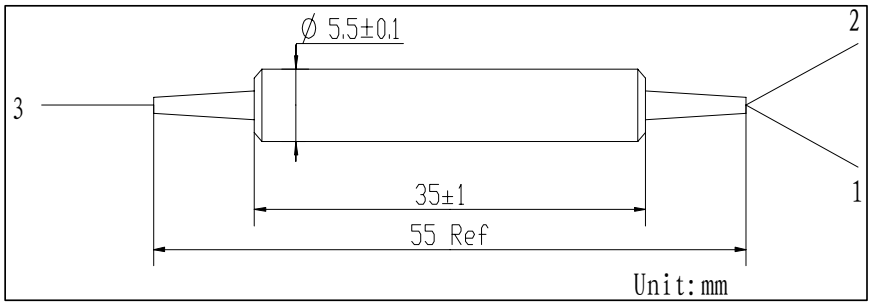

Ordering Information

IPBC-①①-②-③③③-④④④-⑤-⑥
IPBS-①①-②-③③③-④④④-⑤-⑥

①①: Wavelength
31 - 1310nm
48 - 1480nm
55 - 1550nm
SS - Specify

②: Stage
S - Single Stage
D - Dual Stage

③③③: Connector Type on Port 1, 2 & 3
1 - FC/UPC
2 - FC/APC
3 - SC/UPC
4 - SC/APC
N - None
S - Specify

④④④: Fiber Jacket on Port 1, 2 & 3
B - 250um Fiber
D - 400um Fiber
L - 900um Loose Tube (only for PM Fiber)
S - Specify

⑤: Fiber Type on Port 3
1 - SMF-28e Fiber
2 - Slow axis align 45° to Port 1
3 - Slow axis align to Port 1
S - Specify

⑥: Fiber Length
0.8 - 0.8m
S - Specify

Polarization Beam Combiner/Splitter

Features

Compact High Performance
High Extinction Ratio
Low Insertion Loss
High Directivity

Applications

Polarization Mode Dispersion Compensator
EDFA & Raman Amplifier
Coherent Telecommunication Systems
Fiber Optic Sensor

Specifications

Parameter	Unit	Values	
Grade		Grade P	Grade A
Center Wavelength	nm	1310,1480 or 1550	
Operating Wavelength Range	nm	±40	
Typ. Insertion loss	dB	0.4	0.5
Max. Insertion loss	dB	0.6	0.7
Min. Return Loss	dB	50	
Min. Extinction Ratio (for Splitter only)	dB	22	20
Min.PDL 23°C (only for SMF-28e Fiber on all ports)	dB	20	
Min. Directivity	dB	50	
Max. Optical Power (CW)	mW	500	
Max. Tensile Load	N	5	
Fiber Type		PM Panda Fiber on Port 1 & 2 or Specify	
Operating Temperature	℃	-5 to +70	
Storage Temperature	℃	-40 to +85	

*Above specifications are for device without connector.

*For devices with connectors, IL will be 0.3dB higher, RL will be 5dB lower and ER will be 2dB lower.

*The PM fiber and the connector key are aligned to the slow axis.

Package Dimensions

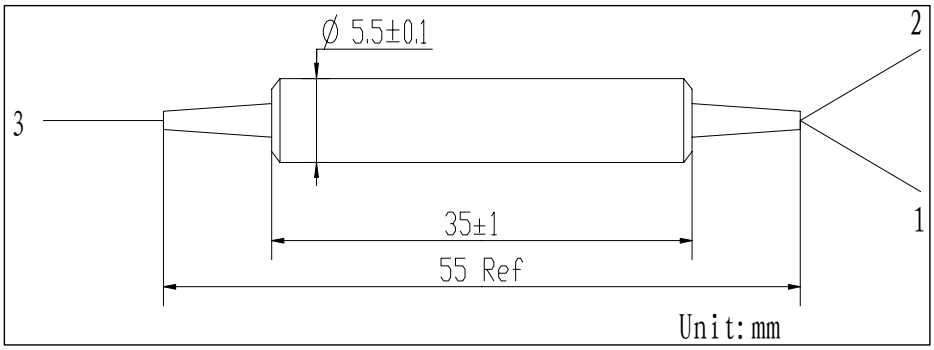

Ordering Information

PBC-①①-②-③-④④④-⑤⑤⑤-⑥-⑦

PBS-①①-②-③-④④④-⑤⑤⑤-⑥-⑦

①①: Wavelength
31 - 1310nm
48 - 1480nm
55 - 1550nm
SS - Specify

②: Grade
P - Premium
A - A Grade

③: Port
1 - 1x2

④④④: Connector Type on Port 1, 2 & 3
1 - FC/UPC
2 - FC/APC
3 - SC/UPC
4 - SC/APC
N - None
S - Specify

⑤⑤⑤: Fiber Jacket on Port 1, 2 & 3
B - 250um Bare Fiber
D - 400um Bare Fiber (only for PM Fiber)
L - 900um Loose Tube
S - Specify

⑥: Fiber Type on Port 3
1 - SMF-28e Fiber
2 - PM Panda Fiber, Slow Axis align 45°to Port
3 - PM Panda Fiber, Slow Axis align to Port 1
4 - All ports are SMF-28e
S - Specify

⑦: Fiber Length
0.8 - 0.8m
S - Specify

2x2 Polarization Beam Combiner/Splitter

Features

Compact High Performance
High Extinction Ratio
Low Insertion Loss
High Directivity

Applications

Polarization Mode Dispersion Compensator
EDFA & Raman Amplifier
Coherent Telecommunication Systems
Fiber Optic Sensor

Specifications

Parameter	Unit	Values
Grade	-	Grade A
Center Wavelength	nm	1550
Operating Wavelength Range	nm	±40
Typ. Excess Loss (Port 3 to Port 1/2 at Slow Axis; Port 4 to Port 1/2 at Fast Axis)	dB	1.2
Max. Excess Loss (Port 3 to Port 1/2 at Slow Axis; Port 4 to Port 1/2 at Fast Axis)	dB	1.5
Min. Extinction Ratio (Port 3 to Port 1 and Port 4 to Port 2, for Splitter only)	dB	17
Min. Extinction Ratio (Port 3 to Port 2 and Port 4 to Port 1, for Splitter only)	dB	19
Min. Return Loss	dB	50
Min. Directivity (Port 1 to Port 2, Port 3 to Port 4)	dB	50
Max. Optical Power (CW)	mW	500
Max. Tensile Load	N	5
Fiber Type	-	PM Panda Fiber on Port 1 & 2
Operating Temperature	℃	-5 to +70
Storage Temperature	℃	-40 to +85

*Above specifications are for device without connector.

*For devices with connectors, IL will be 0.3dB higher, RL will be 5dB lower and ER will be 2dB lower.

*The PM fiber and the connector key are aligned to the slow axis.

Optical Path

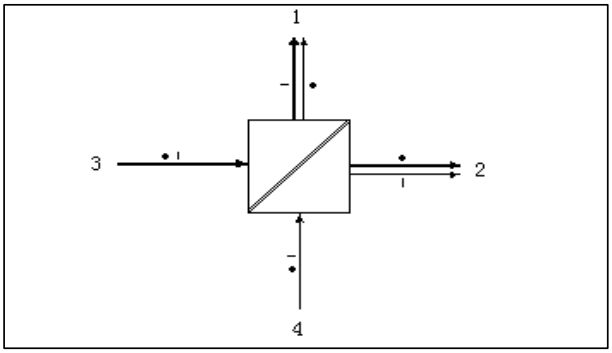

Package Dimensions

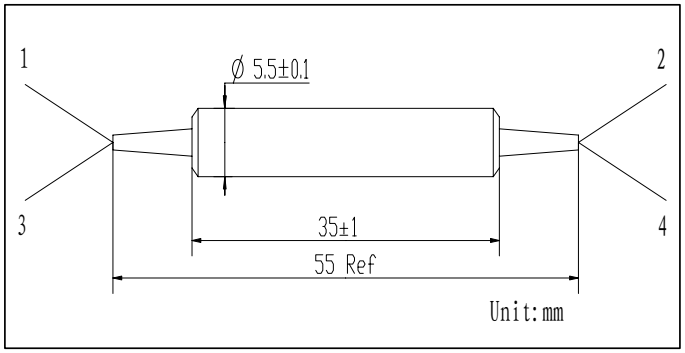

Ordering Information

PBC-①①-②-③-④④④④-⑤⑤⑤⑤-⑥⑥-⑦
PBS-①①-②-③-④④④④-⑤⑤⑤⑤-⑥⑥-⑦

①①: Wavelength
55 - 1550nm

②: Grade
A - A Grade

③: Port
2 - 2x2

④④④④: Connector Type Port 1, 2, 3 & 4
1 - FC/UPC
2 - FC/APC
3 - SC/UPC
4 - SC/APC
N - None
S - Specify

⑤⑤⑤⑤: Fiber Jacket on Port 1, 2, 3 & 4
B - 250um Bare Fiber
L - 900um Loose Tube
S - Specify

⑥⑥: Fiber Type on Port 3 & 4
1 - SMF-28e Fiber
2 - PM Panda Fiber
S - Specify

⑦: Fiber Length
0.8 - 0.8m
S - Specify

Polarization Maintaining Bandpass Filter

Features

High Isolation
Low Insertion Loss
High Return Loss
Excellent Environmental Stability
High Power Handling Capability

Applications

EDFAs
DWDM Systems
Fiber Lasers
Research

Specifications

Parameters	Unit	Values
Nominal center Wavelength	nm	1546.5
Operating Pass Band	nm	1528 ~1565
Min.Attenuation at Wavelength <1521nm and >1574nm	dB	12
Typ. Insertion Loss at 1528 ~1565nm	dB	0.5
Max. Insertion Loss at 1528 ~1565nm	dB	0.7
Min. Return Loss	dB	50
Min. Extinction Ratio	dB	20
Typ. Extinction Ratio	dB	22
Thermal Stability	dB/℃	≤0.005
Max. Optical Power (CW)	mW	500
Max. Tensile Load	N	5
Fiber Type		PM Panda Fiber
Operating Temperature	℃	-5 to +70
Storage Temperature	℃	-40 to +85

*Above specifications are for device without connector.
*For devices with connectors, IL will be 0.3dB higher, RL will be 5dB lower and ER will be 2dB lower.
*The PM fiber and the key are aligned to the slow axis.

Package Dimensions

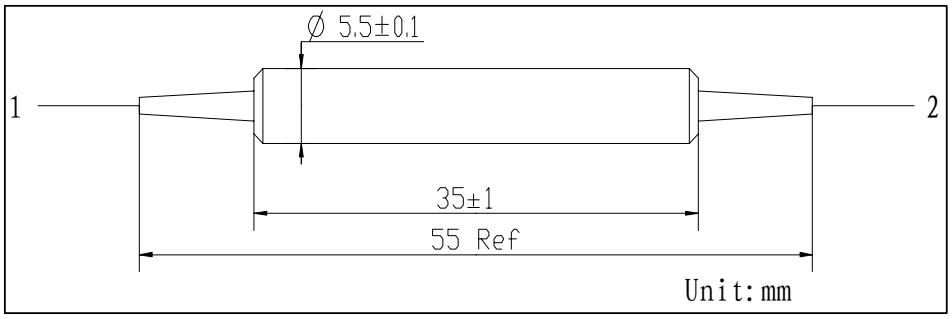

Ordering Information

PMBPF-①①①①-②②-③③-④④-⑤⑤-⑥

①①①①: Wavelength
1546.5 - 1528~1565nm
SSSS - Specify

②②: Pass Band Width
37 - 37nm
SS - Specify

③③: Stop Band Width
53 - 53nm
SS - Specify

④④: Connector Type on Port 1 & 2
1 - FC/UPC
2 - FC/APC
3 - SC/UPC
4 - SC/APC
N - None
S - Specify

⑤⑤: Fiber Jacket on Port 1 & 2
B - 250um Bare Fiber
L - 900um Loose Tube
C - 3mm Cable
S - Specify

⑥: Fiber Length
1 - 1.0m
S - Specify

Polarization Maintaining Fiber Collimator

Features

High Extinction Ratio
Low Insertion Loss
High Return Loss

Applications

PM Components
Fiber Sensors
Free Space Communications
Research

Specifications

Parameters	Unit	Values
Center Wavelength	nm	1310 or 1550
Operating Wavelength Range	nm	±30
Working Distance	mm	5
Typ. Insertion Loss at 5mm WD	dB	0.2
Max. Insertion Loss at 5mm WD	dB	0.25
Min. Return Loss	dB	60
Typ. Extinction Ratio	dB	25
Min. Extinction Ratio	dB	23
Tensile Load	N	5
Max. Optical Power (CW)	mW	500
Fiber Type		PM Panda Fiber
Operating Temperature	℃	-5 to +70
Storage Temperature	℃	-40 to +85

*Above specifications are for device without connector.
*For devices with connectors, IL will be 0.3dB higher, RL will be 5dB lower and ER will be 2dB lower.
*The PM fiber & connector key are aligned to the slow axis.
*Tolerance of nominal beam diameter is ±10%.

Package Dimensions

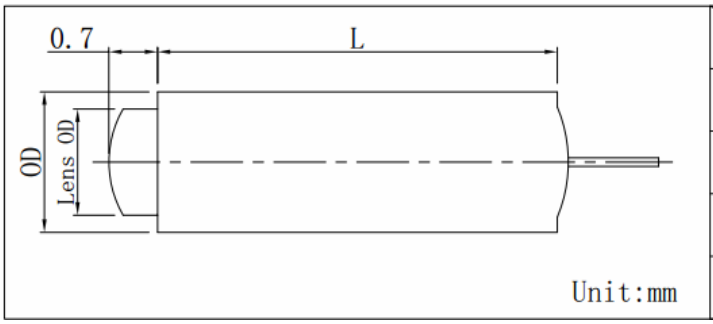

	Metal Holder	Glass Tube
OD (For 1.8mm Lens Dia)	Φ3.2±0.02 □	Φ2.78±0.02 □
L (For 1.8mm Lens Dia)	10±0.1 □	9.0±0.1 □
OD (For 1.0mm Lens Dia)	Φ1.8±0.02 □	Φ1.4±0.02 □
L (For 1.0mm Lens Dia)	9.0±0.1 □	7.0±0.1 □

Ordering Information

PMC-①①-②-③-④-⑤-⑥⑥-⑦⑦-⑧⑧-⑨-⑩-⑪-⑫⑫

①①: Wavelength
31 - 1310nm
55 - 1550nm
SS - Specify

②: Pigtail Type
S - Single Fiber
D - Dual Fiber

③: Lens Diameter
1 - 1.8mm
2 - 1.0mm (for Single Fiber only)
S - Specify

④: Lens Type
G - Grin Lens
C - C Lens

⑤: Working Distance
1 - 5mm
S - Specify

⑥⑥: Connector Type
1 - FC/UPC
2 - FC/APC
3 - SC/UPC
4 - SC/APC
N - None
S - Specify

⑦⑦: Fiber Jacket
B - 250um Bare Fiber
L - 900um Loose Tube

⑧⑧:Fiber Type
1 - Fiber PM-98-025-B
2 - Fiber PM-31-025-B
3 - Fiber PM-55-025-E
S - Specify

⑨: Fiber Orientation
I - B -T -D -P -E -H -L
O - One Fiber

⑩: Fiber Length
1.5 - 1.5m
S - Specify

⑪: Package Type
1 - Metal Holder
2 - Glass Tube

⑫⑫: Nominal Beam Diameter
36 - 0.36mm at 1550nm
45 - 0.45mm at 1550nm only for C Lens
33 - 0.33mm at 1310nm
42 - 0.42mm at 1310nm only for C Lens
S - Specify

Polarization Maintaining Optical Circulator

Features

Low Insertion Loss
High Return Loss

Applications

Fiber Optic Instruments
Fiber Sensors
Coherent Detecting
Research

Specifications

Parameter	Unit	Values	
Type		Type A	Type B
Center Wavelength	nm	1310 or 1550	
Operating Wavelength Range	nm	±30	±20
Min. Isolation, 23℃ (3→2,2→1)	dB	40	20
Typ. Isolation (3→2,2→1)	dB	46	30
Typ. Peak Isolation (3→2,2→1)	dB	52	40
Typ. Insertion Loss (1→2,2→3)	dB	0.7	0.6
Max. Insertion Loss (1→2,2→3)	dB	0.9	0.8
Min. Return Loss	dB	55	
Min. Extinction Ratio	dB	22	20
Min. Cross Talk	dB	50	
Max. Optical Power (CW)	mW	500	
Max. Tensile Load	N	5	
Fiber Type		PM Panda Fiber	
Operating Temperature	℃	-5 to +70	
Storage Temperature	℃	-40 to +85	

*Above specifications are for device without connector.
*For devices with connectors, IL will be 0.3dB higher, RL will be 5dB lower and ER will be 2dB lower.
*The PM fiber and the connector key are aligned to the slow axis and fast axis is blocked.

Package Dimensions

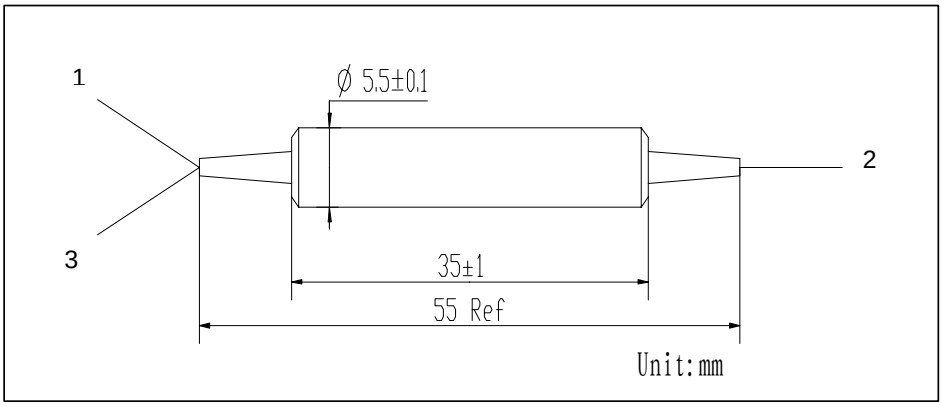

Ordering Information

PMCIR-①①-②-③-④④④-⑤⑤⑤-⑥

①①: Wavelength
31 - 1310nm
55 - 1550nm
SS- Specify

②: Type
A - Type A
B - Type B

③: Port
1 - 1X2

④④④: Connector Type on Port 1, 2 & 3
1 - FC/UPC
2 - FC/APC
3 - SC/UPC
4 - SC/APC
N - None
S - Specify

⑤⑤⑤: Fiber Jacket on Port 1, 2 & 3
B - 250um Fiber
D - 400um Fiber
L - 900um Loose Tube
S - Specify

⑥: Fiber Length
0.8 - 0.8m
S - Specify

2x2 Polarization Maintaining Optical Circulator

Features

High Isolation
High Extinction Ratio
Low Insertion Loss
Excellent Environment Stability

Applications

Polarization Mode Dispersion Compensator
EDFA & Raman Amplifier
Coherent Telecommunication Systems
Fiber Optic Sensor

Specifications

Parameter	Unit	Values	
Type		Type A	Type B
Center Wavelength	nm	1310 or 1550	
Operating Wavelength Range	nm	± 30	± 20
Min. Isolation at 23℃	dB	40	20
Typ. Isolation	dB	50	30
Peak Isolation	dB	55	40
Typ. Insertion Loss	dB	0.8	0.7
Max. Insertion Loss	dB	1.1	1.0
Min. Return Loss	dB	55	
Min. Extinction Ratio	dB	20	20
Min. Cross Talk (Port 1 to Port 3, Port 2 to Port 4)	dB	50	
Max. Optical Power (CW)	mW	500	
Max. Tensile Load	N	5	
Fiber Type		PM Panda Fiber	
Operating Temperature	℃	-5 to +70	
Storage Temperature	℃	-40 to +85	

*Above specifications are for device without connector.

*For devices with connectors, IL will be 0.3dB higher, RL will be 5dB lower, and ER will be 2dB lower.

*The transmission optical path of A type is different from B type:
A type: 1 -> 2, 2 -> 3, 3 -> 4; B type: 1 -> 2, 2 -> 3, 3 -> 4, 4 -> 1.

*The PM fiber and the key are aligned to the slow axis and fast axis is blocked.

Package Dimensions

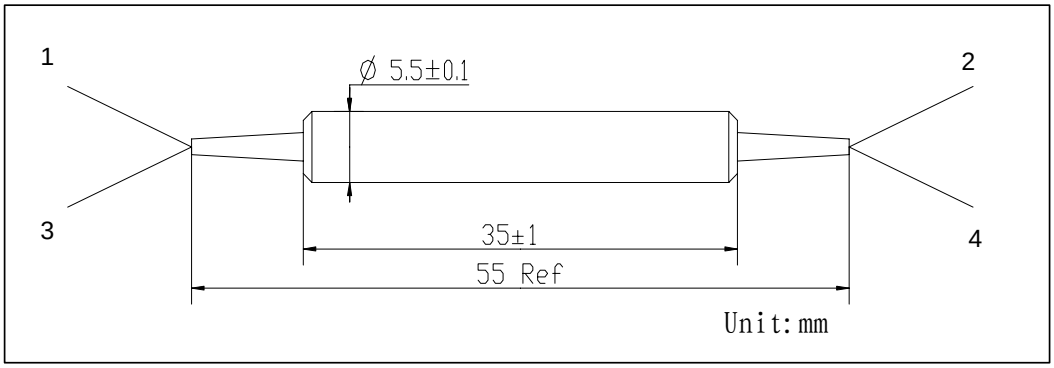

Ordering Information

PMCIR-①①-②-③-④④④④-⑤⑤⑤⑤-⑥

①①: Wavelength
31 - 1310nm
55 - 1550nm
SS- Specify

②: Type
A - Type A
B - Type B

③: Port
2 - 2x2

④④④④: Connector Type on Port 1,2, 3 & 4
1 - FC/UPC
2 - FC/APC
3 - SC/UPC
4 - SC/APC
N - None
S - Specify

⑤⑤⑤⑤: Fiber Jacket on Port 1,2, 3 & 4
B - 250um Bare Fiber
D - 400um Bare Fiber
L - 900um LooseTube
S - Specify

⑥: Fiber Length
0.8 - 0.8m
S - Specify

Polarization Maintaining Coarse Wavelength Division Multiplexers

Features

Wide Passband
Low Insertion Loss
High Channel Isolation
Excellent Environmental Stability

Applications

CWDM Systems
Research

Specifications

Parameters	Unit	Values
Center Wavelength	nm	1270, 1290, … 1590, 1610
		1271, 1291, … 1591, 1611
Pass Band	nm	±6.5
Insertion Loss	dB	≤0.6
Reflection Insertion Loss	dB	≤0.4
Extinction Ratio	dB	≥20
Adjacent Channel Isolation	dB	≥25
Return Loss	dB	≥50
Directivity	dB	≥50
Thermal Stability	dB/℃	≤0.005
Max. Optical Power (CW)	mW	500
Max. Tensile Load	N	5
Fiber Type	-	PM Panda Fiber
Operating Temperature	℃	-5 to +70
Storage Temperature	℃	-40 to +85

*Above specifications are for device without connector.
*For devices with connectors, IL will be 0.3dB higher, ER will be 2dB lower and RL will be 5dB lower.
*The PM fiber and the connector key are aligned to the slow axis.

Package Dimensions

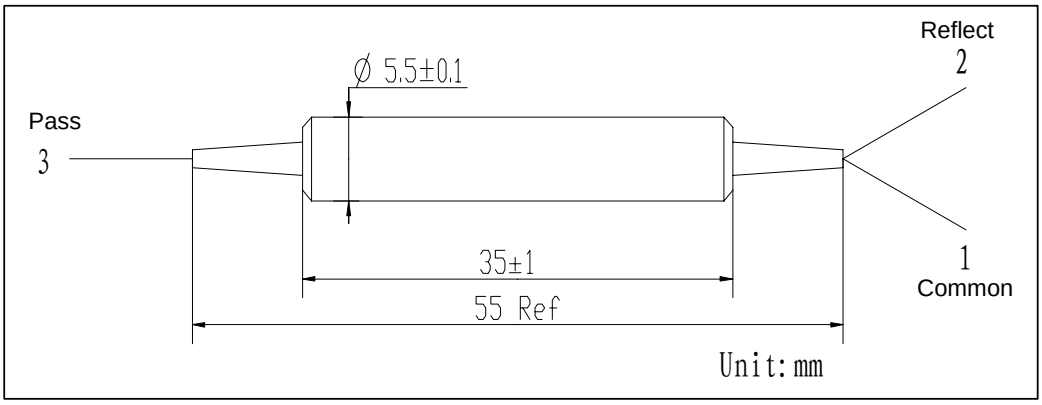

Ordering Information

PMCWDM-①①①①-②②②-③③③-④

①①①①: Wavelength
1270-1270nm
1271-1271nm
SSSS - Specify

②②②: Connector Type on Port 1, 2 & 3
1 - FC/UPC
2 - FC/APC
3 - SC/UPC
4 - SC/APC
N - None
S - Specify

③③③: Fiber Type on Port 1, 2 & 3
B - 250um Bare Fiber
L - 900um Loose Tube
S - Specify

④: Fiber Length
1 - 1.0m
S - Specify

Polarization Maintaining Dense Wavelength Division Multiplexer

Features

Low Insertion Loss

High Quality and Reliability

Applications

High Speed Networks

Coherent Deteching

Fiber Sensors

Research

Specifications

Parameters		Unit	Values	
Filter Type			200GHz	100GHz
Pass Band	Center Wavelength	nm	ITU Grid	
	Typ. Bandwidth at 0.5dB	nm	0.7	0.4
	Min. Bandwidth at 0.5dB	nm	0.5	0.2
	Typ. Channel Isolation at C→P	dB	30	30
	Min. Channel Isolation at C→P	dB	25	25
	Typ. Insertion Loss at C→P	dB	0.8	1.0
	Max. Insertion Loss at C→P	dB	1.0	1.2
Reflection Band	Typ. Channel Isolation at C→R	dB	15	15
	Min. Channel Isolation at C→R	dB	12	12
	Typ. Insertion Loss at C→R	dB	0.3	0.3
	Max. Insertion Loss at C→R	dB	0.5	0.5
Typ. Extinction Ratio at 23°C		dB	22	22
Min. Extinction Ratio at 23°C		dB	20	20
Min Return Loss		dB	50	50
Min. Directivity		dB	45	45
Thermal Stability		dB/℃	≤0.005	
Max. Optical Power (CW)		mW	500	
Max. Tensile Load		N	5	
Fiber Type			PM Panda Fiber	
Operating Temperature		℃	-5 to +70	
Storage Temperature		℃	-40 to +85	

*Above specifications are for devices without connectors.

*For devices with connectors, IL will be 0.3dB higher, RL will be 5dB lower, and ER will be 2dB lower.

*The PM fiber and connector key are aligned to the slow axis.

Package Dimensions

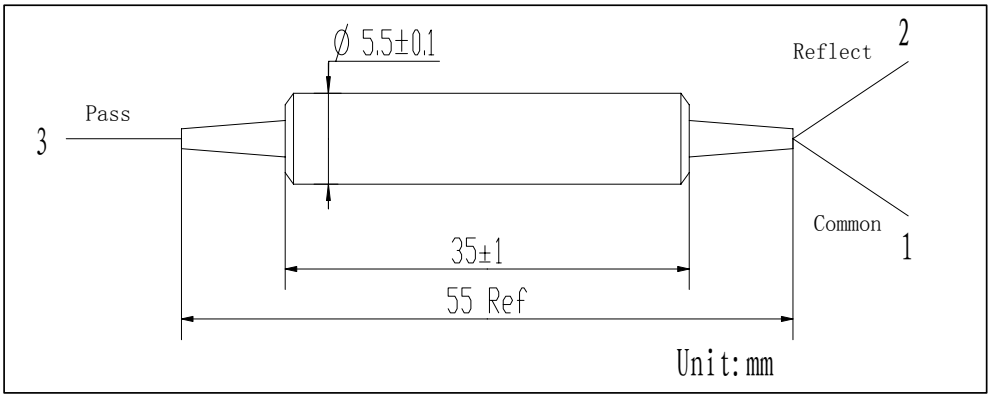

Ordering Information

PMDWDM-①-②②-③③③-④④④-⑤

①: Channel Spacing
1 - 100 GHz
2 - 200 GHz

②②: ITU Grid

③③③: Connector Type on Port 1, 2 & 3
1 - FC/UPC
2 - FC/APC
3 - SC/UPC
4 - SC/APC
N - None
S - Specify

④④④: Fiber Jacket on Port 1, 2 & 3
B - 250um Fiber
D - 400um Fiber
L - 900um Loose Tube
S - Specify

⑤: Fiber Length
0.8 - 0.8 m
S - Specify

Polarization Maintaining Filter Coupler

Features

Low Insertion Loss

High Return Loss

Applications

Fiber Optic Instruments

Fiber Amplifiers

Fiber Lasers

Fiber Sensors

Specifications

Parameters	Unit	Values	
Port Type		1X2	2X2
Center Wavelength	nm	1310 or 1550	
Operating Wavelength Range	nm	±40	
Max. Excess Loss	dB	0.7	1.0
Max. Uniformity (only for 50/50)	dB	0.4	0.6
Tap Ratio (Port 2/4)	%	1±0.2%, 2±0.4%, 5±1.0%, 10%, and 50%	
Min. Return Loss	dB	50	
Min. Extinction Ratio (only for F type)	dB	22	22
Min. Extinction Ratio (only for B type)	dB	20	18
Max. Optical Power (CW)	mW	500 (only for Splitter)	
Max. Tensile Load	N	5	
Fiber Type		SMF-28e or PM Panda Fiber on Tap Port	
		PM Panda Fiber on Port 1 & Port 3	
Operating Temperature	℃	-5 to +70	
Storage Temperature	℃	-40 to +85	

* Above specifications are for devices without the connectors.

* For devices with connectors, IL will be 0.3dB higher, RL will be 5dB lower, and ER will be 2dB lower.

*The PM fiber and the connector key are aligned to the slow axis. And for F type, fast axis is blocked.

Package Dimensions

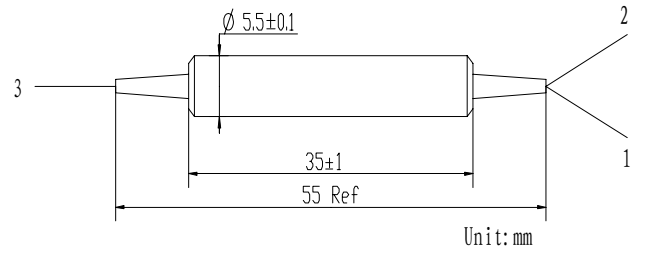

Optical Path of B Type:Port 1 to Port2/3,Port 2 is Tap Port
Optical Path of F Type:Port 3 to Port1/2,Port 2 is Tap Port.

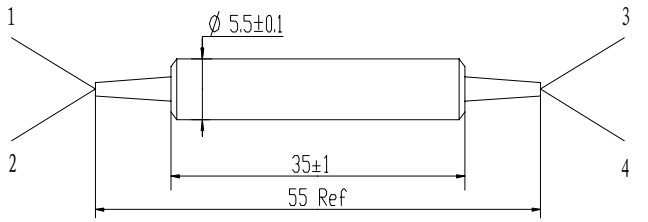

Optical Path of B Type:Port 1 to Port2/3,Port 2 is Tap Port
Port 3 to Port1/4,Port 4 is Tap Port
Optical Path of F Type:Port 1 to Port3/4,Port 4 is Tap Port
Port 3 to Port1/2,Port 2 is Tap Port.

Unit:mm

Ordering Information

PMFC-①①-②-③③-④-⑤⑤⑤-⑥⑥⑥⑥-⑦-⑧

①①: Wavelength
31 - 1310nm
55 - 1550nm
SS - Specify

②: Port
1 - 1x2
2 - 2x2

③③: Coupling Ratio
01 - 1/99
02 - 2/98
04 - 4/96
05 - 5/95
10 - 10/90
20 - 20/80
50 - 50/50
SS - Specify

④: Axis Alignment
F - Fast Axis Blocked
B - Both Axis Working

⑤⑤⑤: Connector Type on Port 1, 2, 3 & 4
1 - FC/UPC
2 - FC/APC
3 - SC/UPC
4 - SC/APC
N - None
S - Specify

⑥⑥⑥: Fiber Jacket on Port 1, 2, 3 & 4
B - 250um Fiber
D - 400um Fiber
L - 900um Loose Tube
S - Specify

⑦: Fiber Type on Tap port
M - SMF-28e Fiber (For 1x2 only)
P - PM Panda Fiber
S - Specify

⑧: Fiber Length
0.8 - 0.8m
S - Specify

Polarization Maintaining Filter Coupler Module (1x4 / 1x8)1310/1550nm

Features

Low Excess Loss
Low WDL
Low Uniformity

Applications

PM Sensors
Amplifiers
Lasers

Specifications

Parameters	Unit	1x4	1x8
Center Wavelength	nm	1310 or 1550	1310 or 1550
Operating Wavelength Range	nm	+/-30	+/-30
Insertion Loss	dB	≤7.5, Typ. 7.0	≤11.0, Typ. 10.5
Wavelength Dependent Loss	dB	≤0.5, Typ. 0.3	≤0.5, Typ. 0.3
Ports IL Uniformity	dB	≤0.8	≤1.0
Return Loss	dB	≥50	≥50
Directivity	dB	≥50	≥45
Extinction Ratio (only for B Type)	dB	≥20	≥17
Extinction Ratio (only for F Type)	dB	≥23	≥23
Polarization Dependent Loss (only for B Type)	dB	≤0.1	≤0.15
Temperature Dependent Loss	dB/℃	≤0.006	≤0.008
Fiber Type		PM Panda Fiber	PM Panda Fiber
Operating Temperature	℃	-5 to+70	-5 to+70
Storage Temperature	℃	-40 to +85	-40 to +85
Package Dimensions	mm	160*140*10	160*160*10

*Above specifications are for module without connector.
*For modules with connectors, IL will be 0.3dB higher, RL will be 5dB lower and ER will be 2dB lower.
*The PM fiber and the connector key are aligned to the slow axis.

Package Dimensions

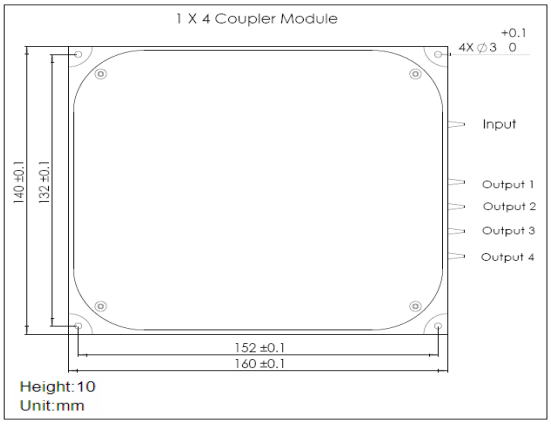

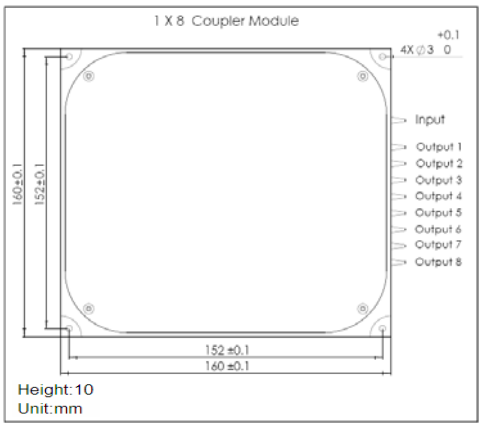

Ordering Information

PMFCM-①①-②②②②-③③-④-⑤-⑥-⑦

①①: Center Wavelength
31 - 1310nm
55 - 1550nm

②②②②: Ports Configuration
0104 - 1x4
0108 - 1x8

③③: Splitting Ratio
BA - Balance
SS - Specify

④: Working Axis
F - Fast Axis Blocked
B - Both Axis Working

⑤: Connector Type
1 - FC/UPC
2 - FC/APC
3 - SC/UPC
4 - SC/APC
N - None
S - Specify

⑥: Fiber Type
L - 900um Loose Tube
C - 3mm Loose Cable
S - Specify

⑦: Fiber Length
0.5 - 0.5m
S - Specify

Polarization Maintaining Faraday Mirror

Features

Low Insertion Loss
High Return Loss
High Power Capability

Applications

Fiber Optic Instruments
Fiber Sensors
Fiber Lasers
Coherent Detecting
Research

Specifications

Parameters	Unit	Values
Center Wavelength	nm	1310, 1480 or 1550
Operating Wavelength Range	nm	±30
Typ. Insertion Loss	dB	0.4
Max. Insertion Loss	dB	0.6
Faraday Rotation Angle (Single Pass)	deg	45
Max. Rotation Angle Tolerance at 23℃, CWL	deg	±1
Min. Extinction Ratio	dB	20
Max. Optical Power (CW)	mW	500
Max. Tensile Load	N	5
Fiber Type		PM Panda Fiber
Operating Temperature	℃	-5 to +70
Storage Temperature	℃	-40 to +85

*Above specifications are for device without connector.
*For devices with connectors, IL will be 0.3dB higher, ER will be 2dB lower.

Package Dimensions

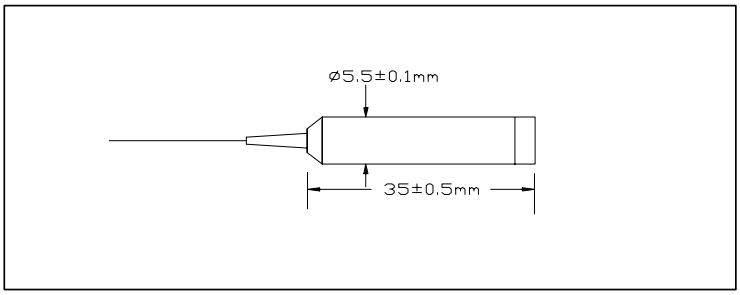

Ordering Information

PMFM- ①①-②-③-④

①①: Wavelength
31 - 1310nm
48 - 1480nm
55 - 1550nm
SS - Specify

②: Connector Type
1 - FC/UPC
2 - FC/APC
3 - SC/UPC
4 - SC/APC
N - None
S - Specify

③: Fiber Jacket
B - 250um Fiber
D - 400um Fiber
L - 900um Loose Tube
S - Specify

④: Fiber Length
0.8 - 0.8m
S - Specify

Polarization Maintaining Filter Wavelength Division Multiplexers

Features

Low Insertion Loss
High Return Loss
High Isolation

Applications

Fiber Optic Instruments
Raman Amplifiers
EDFAs
Fiber Sensors

Specifications

Parameters		Unit	Values		
Pass Band	Wavelength Range	nm	1270-1350(1530-1600)	1450-1490(1530-1600)	1500-1520(1530-1570)
	Typ. Insertion Loss	dB	0.4	0.4	0.5
	Max. Insertion Loss	dB	0.6	0.6	0.7
	Typ. Isolation	dB	30	30	30
	Min. Isolation	dB	25	25	25
Reflection Band	Wavelength Range	nm	1530-1600(1270-1350)	1530-1600(1450-1490)	1530-1570(1500-1520)
	Typ. Insertion Loss	dB	0.3		
	Max. Insertion Loss	dB	0.5		
	Typ. Isolation	dB	15		
	Min. Isolation	dB	12		
Min. Extinction Ratio		dB	20		
Min. Return Loss		dB	50		
Thermal Stability		dB/℃	≤0.005		
Max. Optical Power (CW)		mW	500		
Max. Tensile Load		N	5		
Fiber Type			PM Panda Fiber		
Operating Temperature		℃	-5 to +70		
Storage Temperature		℃	-40 to +85		

*Above specifications are for device without connector.
*For devices with connectors, IL will be 0.3dB higher, RL will be 5dB lower and ER will be 2dB lower.
*The PM fiber and the key are aligned to the slow axis.

Package Dimensions

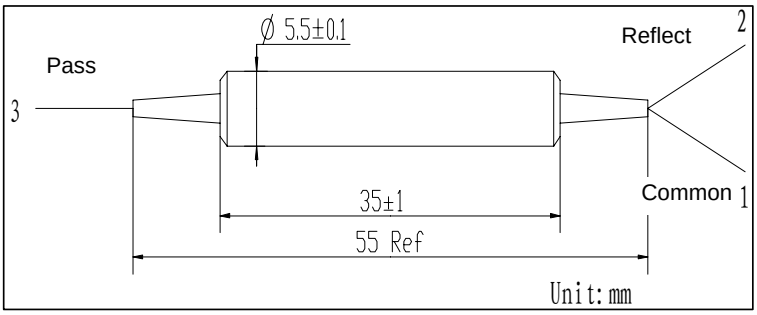

Ordering Information

PMFWDM-①①①①-②②②-③③③-④

①①①①: Wavelength
3155 - 1310nm Pass / 1550nm Reflect
5531 - 1550nm Pass / 1310nm Reflect
4855 - 1480nm Pass / 1550nm Reflect
5548 - 1550nm Pass / 1480nm Reflect
5155 - 1510nm Pass / 1550nm Reflect
5551 - 1550nm Pass / 1510nm Reflect

②②②: Connector Type on Port
1 - FC/UPC
2 - FC/APC
3 - SC/UPC
4 - SC/APC
N - None
S - Specify

③③③: Fiber Jacket on Port 1, 2 & 3
B - 250um Fiber
D - 400um Fiber
L - 900um Loose Tube
S - Specify

④: Fiber Length
0.8 - 0.8m
S - Specify

Polarization Maintaining Filter Wavelength Division Multiplexer

Features

Wide Pass Band
Low Insertion Loss
High Return Loss
Excellent Environmental Stability

Applications

Fiber Lasers
Fiber Amplifiers
Fiber Sensors
Research

Specifications

Parameters		Unit	Values
Pass Band	Wavelength Range	nm	1520~1580
	Max. Insertion Loss	dB	0.7
	Typ. Insertion Loss	dB	0.5
	Min. Isolation	dB	25
	Typ. Isolation	dB	30
Reflection Band	Wavelength Range	nm	960~990
	Max. Insertion Loss	dB	0.6
	Typ. Insertion Loss	dB	0.4
	Min. Isolation	dB	12
	Typ. Isolation	dB	15
Min. Return Loss		dB	50
Min. Directivity(over 960~990nm)		dB	60
Min. Extinction Ratio		dB	20
Typ. Extinction Ratio		dB	22
Thermal Stability		dB/℃	≤0.005
Max. Optical Power (CW)		mW	500
Max. Tensile Load		N	5
Fiber Type			PM 1550 Panda Fiber for Port 1/3, Hi 1060 Fiber for Port 2
Operating Temperature		℃	-5 to +70
Storage Temperature		℃	-40 to +85

*Above specifications are for device without connector.
*For devices with connectors, IL will be 0.3dB higher, ER will be 2dB lower and RL will be 5dB lower.
*The PM fiber and the connector key are aligned to the slow axis.

Package Dimensions

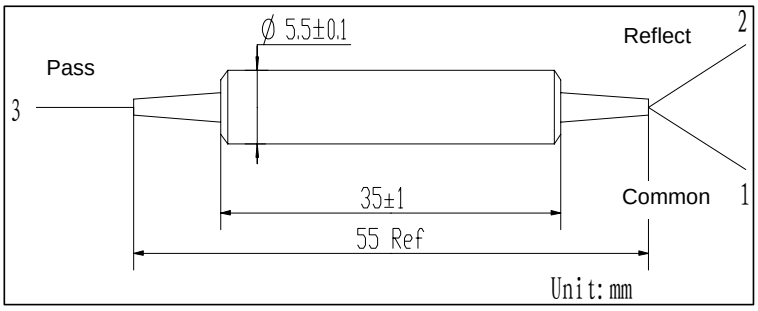

Ordering Information

PMFWDM-①①①①-②②②-③③③-④

①①①①: Wavelength
5598 - 1550nm Pass / 980nm Reflect

②②②: Connector Type on Port 1, 2 & 3
1 - FC/UPC
2 - FC/APC
3 - SC/UPC
4 - SC/APC
N - None
S - Specify

③③③: Fiber Jacket on Port 1, 2 & 3
B - 250um Bare Fiber
L - 900um Loose Tube
S - Specify

④: Fiber Length
0.8 - 0.8m
S - Specify

Polarization Maintaining Isolator

Features

High Isolation
Low Insertion Loss
Large Aperture Features

Applications

Fiber Optic Lasers
Optical Transmitters & Transceivers
Fiber Amplifiers
Fiber Sensors

Specifications

Parameters	Unit	Values			
Stage		Single Stage		Dual Stage	
Grade		Grade P	Grade A	Grade P	Grade A
Center Wavelength (λc)	nm	1310, 1480 or 1550			
Operating Wavelength Range	nm	±20			
Typ. Peak Isolation	dB	42	40	58	55
Min. Isolation at 23℃	dB	28	26	48	45
Typ. Insertion Loss at 23℃	dB	0.4	0.5	0.5	0.6
Max. Insertion Loss at -5℃-70℃	dB	0.55	0.65	0.65	0.8
Min. Return Loss (Input/Output)	dB	55	55	55	55
Min. Extinction Ratio(only for B tyep)	dB	20	18	20	18
Min. Extinction Ratio(only for F type)	dB	25	23	25	23
Max. Optical Power (CW)	mW	500			
Max. Tensile Load	N	5			
Fiber Type		PM Panda Fiber			
Operating Temperature	℃	-5 to +70			
Storage Temperature	℃	-40 to +85			

*Above specifications are for device without connector.
*For devices with connectors, IL will be 0.3dB higher, RL will be 5dB lower and ER will be 2dB lower.
*The PM fiber and the connector key are aligned to the slow axis.

Package Dimensions

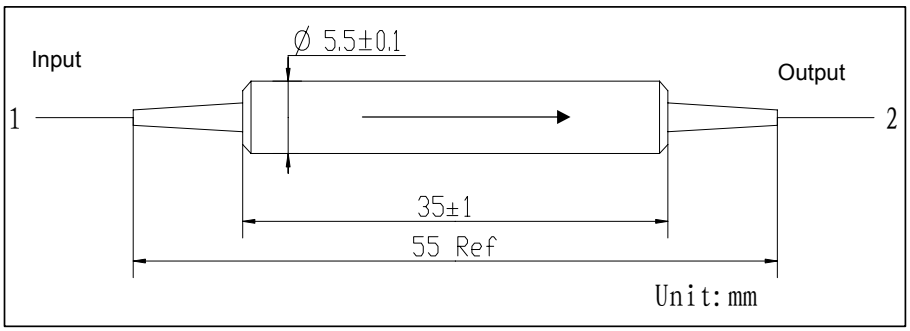

Ordering Information

PMI-①①-②-③-④-⑤⑤-⑥⑥-⑦

①①: Wavelength
31 - 1310nm
48 - 1480nm
55 - 1550nm
SS - Specify

②: Grade
P - Premium Grade
A - A Grade

③: Stage
S - Single Stage
D - Dual Stage

④: Axis Alignment
F - Fast Axis Blocked
B - Both Axis Working

⑤⑤: Connector Type on Port 1 & 2
1 - FC/UPC
2 - FC/APC
3 - SC/UPC
4 - SC/APC
N - None
S - Specify

⑥⑥: Fiber Jacket on Port 1 & 2
B - 250um Fiber
D - 400um Fiber
L - 900um Loose Tube
S - Specify

⑦: Fiber Length
0.8 - 0.8m
S - Specify

PM Isolator WDM Hybrid

Features

Pump / Signal Multiplexing
Low Insertion Loss
Low Cost
High Extinction Ratio

Applications

EDFAs
Fiber Lasers
Fiber Optical Test Equipment

Specifications

Parameters		Unit	Values	
Stage			Single Stage	Dual Stage
Pass Band	Signal Wavelength Range	nm	1530~1580	
	Typ. Insertion Loss@P→C or C→P	dB	0.6	0.8
	Max. Insertion Loss@P→C or C→P	dB	0.8	1.0
	Typ. Peak Signal Isolation,at 23℃	dB	40	55
	Min. Signal Isolation, at 23℃ （1550±15 for S.Stage）	dB	30	48
	Min. Extinction Ratio (only for F-Type)	dB	23	
	Min. Extinction Ratio (only for B-Type)	dB	20	
Reflect Band	Wavelength Range	nm	960~990 or 1460-1490	
	Typ. Insertion Loss@R→C	dB	0.3(for 1480nm pump);0.4(for 980nm pump)	
	Max. Insertion Loss@R→C	dB	0.5(for 1480nm pump);0.6(for 980nm pump)	
Min. Return Loss		dB	50	
Max. Optical Power (CW)		mW	300	
Max. Tensile Load		N	5	
Fiber Type			PM 1550nm panda fiber on Common & Pass ports, HI 1060(for 980nm Pump) or SMF-28e fiber(for 1480nm Pump) on Reflect port	
Operating Temperature		℃	-5 to +70	
Storage Temperature		℃	-40 to +85	

*Above specification are for device without connector
*For devices with connectors, insertion loss will be 0.3dB higher, RL will be 5dB lower, ER will be 2dB lower
*The signal path is aligned to slow axis.

Package Dimensions

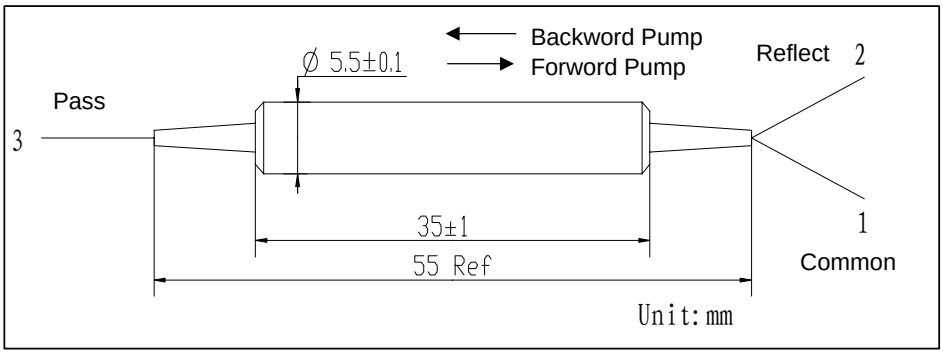

Ordering Information

PMIWDM-①①①①-②-③-④-⑤⑤⑤-⑥⑥⑥-⑦

①①①①:Signal & Pump Wavelength
5598 - 1550nm signal/980nm pump
5548 - 1550nm Signal/1480nm pump

②: Pump Type
F - Forward Pump
B - Backward Pump

③: Stage
S - Single Stage
D - Dual Stage

④: Axis Alignment
F - Fast Axis Blocked
B - Both Axis Working

⑤⑤⑤ : Connector Type
1 - FC/UPC
2 - FC/APC
3 - SC/UPC
4 - SC/APC
S - Specify
N - None

⑥⑥⑥: Fiber Jacket
B - 250um Bare Fiber
L - 900um Loose Tube
S - Specify

⑦: Fiber Length
0.8 - 0.8m
S - Specify

Polarization Maintaining Optical Fiber Mirror

Features

Low Insertion Loss
High Return Loss
High Reliability & Stability

Applications

Fiber Optics Lasers
Fiber Sensors
Coherent Detecting

Specifications

Parameters	Unit	Values
Center Wavelength	nm	1310, 1480 or 1550
Operating Wavelength Range	nm	±30
Typ. Insertion Loss	dB	0.3
Max. Insertion Loss	dB	0.5
Min. Extinction Ratio	dB	22
Max.Optical Power	mW	500
Max. Tensile Load	N	5
Fiber Type		PM Panda Fiber
Operating Temperature	℃	-5 to +70
Storage Temperature	℃	-40 to +85

*Above specifications are for device without connector.
*For devices with connectors, IL will be 0.3dB highe and ER will be 2dB lower.

Package Dimensions

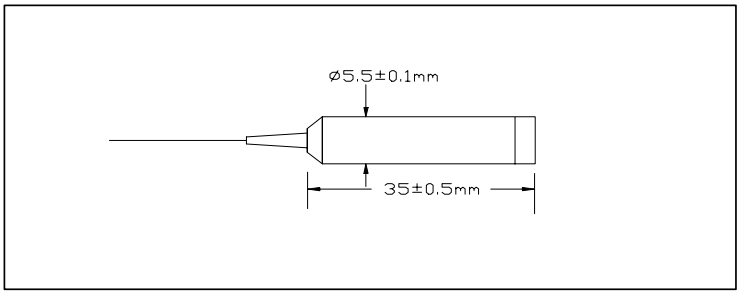

Ordering Information

PMOFM- ①①-②-③-④

①①: Wavelength
31 - 1310nm
48 - 1480nm
53 - 1530nm
55 - 1550nm

②: Connector Type
1 - FC/UPC
2 - FC/APC
3 - SC/UPC
4 - SC/APC
N - None
S - Specify

③: Fiber Jacket
B - 250um Bare Fiber
L - 900um Loose Tube
T - 900um Tight Buffer
C - 3mm Cable
S - Specify

④: Fibre Length
1 - 1.0m
S - Specify

Polarization Maintaining Tap Isolator

Features

Low PDL
Low Insertion Loss
Low Cost

Applications

Fiber Amplifier
Fiber Optic System
Fiber Laser

Specifications

Parameters	Unit	Values	
Stage		Single Stage	Dual Stage
Center Wavelength		1310, 1480, 1550, 1590	
Operating Wavelength Range	nm	+/-20	
Max. Excess Loss	dB	0.8	0.9
Tap Ratio (Input to Tap)	%	1+/-0.2, 2+/-0.4, 3+/-0.6, 4+/-0.8, 5+/-1.0, 10+/-2.0	
Typ. Peak Isolation (Output to Input)	dB	40	58
Min. Isolation at 23℃	dB	28	48
Min. Extinction Ratio (only for B Type)	dB	20	20
Min. Extinction Ratio (only for F Type)	dB	23	23
Min. Return Loss (for all ports)	dB	50	50
Max. Optical Power (CW)	mW	500	
Max. Tensile Load	N	5	
Fiber Type		PM 1550 Panda Fiber for Input and Output Ports, SMF-28e Fiber or Panda Fiber for Tap Port	
Operating Temperature	℃	0 to +70	
Storage Temperature	℃	-40 to +85	

*Above specifications are for device without connector.

*For devices with connectors, IL will be 0.3dB higher, RL will be 5dB lower, ER will be 2dB lower.

*The PM fiber and the connector key are aligned to the slow axis and fast axis is blocked.

Package Dimensions

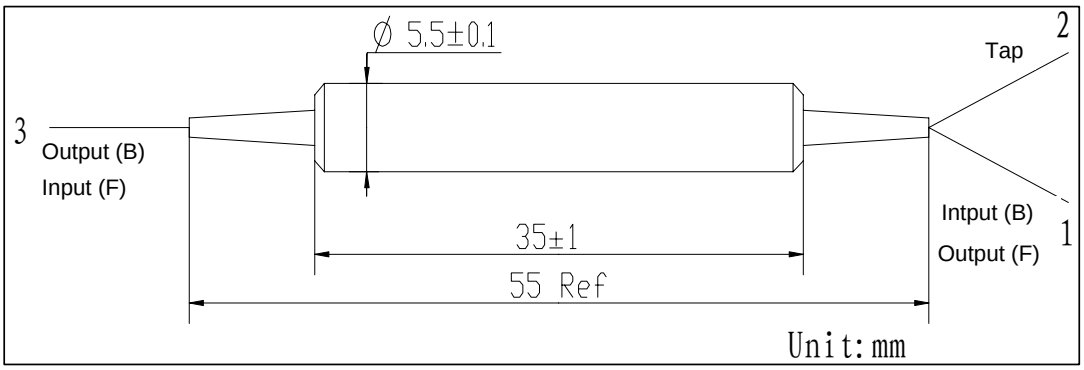

Ordering Information

PMTAPI-①①-②-③③-④-⑤⑤⑤-⑥⑥⑥-⑦-⑧

①①: Wavelength
31 - 1310nm
48 - 1480nm
55 - 1550nm
59 - 1590nm
SS - Specify

②: Stage
S - Single Stage
D - Dual Stage

③③: Tap Ratio
01 - 1%
02 - 2%
03 - 3%
04 - 4%
05 - 5%
10 - 10%
SS - Specify

④: Axis Alignment
F - Fast Axis Blocked
B - Both Axis Working

⑤⑤⑤: Connector Type on Port 1, 2 & 3
1 - FC/UPC
2 - FC/APC
3 - SC/UPC
4 - SC/APC
N - None
S - Specify

⑥⑥⑥: Fiber Jacket on Port 1, 2 & 3
B - 250um Bare Fiber
L - 900um Loose Tube
S - Specify

⑦: Fiber Type on Tap
1 - SMF 28e Fiber
2 - PM Panda Fiber
S - Specify

⑧: Fiber Length
0.8 - 0.8 m
S - Specify

Polarization Maintaining Fiber Patchcord

Features

High Return Loss
Low Insertion Loss
Large Aperture Features

Applications

Fiber Optic Lasers
Optical Transmitters & Transceivers
Fiber Instruments
Fiber I/O Ports

Specifications

Parameters	Unit	Values	
Wavelength	nm	980*, 1064*, 1310, 1480 or 1550	
Connector type		FC/UPC & SC/UPC	FC/APC & SC/APC
Typ. Insertion Loss	dB	0.3	0.4
Key Orientation		Slow Axis	
Max. Insertion Loss	dB	0.5	
Min. Return Loss	dB	50	60
Min. Extinction Ratio	dB	23	
Max. Optical Power (CW)	mW	300	
Max. Tensile Load	N	5	
Fiber Type		PM Panda Fiber	
Fiber Length Tolerance	%	± 10	
Operating Temperature	℃	-5 to +70	
Storage Temperature	℃	-40 to +85	

* IL is 0.1dB higher for short wavelength, including 980nm & 1064nm.

Package Dimensions

Ordering Information

PMP-①①-②-③③-④-⑤

①①: Wavelength
55 - 1550nm
48 - 1480nm
31 - 1310nm
06 - 1060nm
98 - 980nm
S - Specify

②: Key Width (for FC Connector)
R - 2.02mm

③③: Connector Type on End 1 & 2
1 - FC/UPC
2 - FC/APC
3 - SC/UPC
4 - SC/APC
5 - FERRULE UPC
7 - LC/PC
8 - FERRULE APC
9 - MU/PC
A - E2000/APC
B - MPO/APC(SM 8 core)
N - None

④: Fiber Jacket
B - 250um Bare Fiber
D - 400um Bare Fiber
L - 900um Loose Tube
T - 900um Tight Buffer
C - 3mm Cable
S - Specify

⑤: Fiber Length
1 - 1.0m
S - Specify

Optizone PM Tap Isolator WDM Hybrid

Features

Input Signal Power Monitoring
Pump / Signal Multiplexing
Low Insertion Loss
Low Cost
High Extinction Ratio

Applications

EDFAs
Fiber Lasers
Fiber Optical Test Equipment

Specifications

Parameters	Unit	Values	
Stage		Single Stage	Dual Stage
Signal Wavelength Range	nm	1530~1565	
Pump Wavelength Range	nm	960~990 or 1460~1490	
Max. Signal Insertion Loss (Input to Output)	dB	1.1(for 1%), 1.2(for 2%),1.3(for 5%), 1.5(for 10%), 4.2(for 50%)	1.2(for 1%), 1.3(for 2%),1.4(for 5%), 1.6(for 10%), 4.3(for 50%)
Max. Pump Insertion Loss	dB	0.5(for 1480nm pump);0.6(for 980nm pump)	
Signal Tap Ratio(Input to Tap)	%	1+/-0.2, 2+/-0.4, 5+/-1, 10+/-2, 50	
Typ. Signal Peak Isolation (Output to Input)	dB	40	55
Min. Signal Isolation at 23℃; all polarization states	dB	30	48
Min. Directivity (Pump to Tap)	dB	50	
Min.Extinction Ratio (Input to Output, only for F-type)	dB	23	
Min.Extinction Ratio (Input to Output, only for B-type)	dB	20	
Min. Return Loss (for all ports)	dB	50	
Max. Optical Power CW	mW	300	
Max. Tensile Load	N	5	
Fiber Type		PM 1550 Panda Fiber for Input and Output Ports, SMF-28e Fiber for Tap Port, HI 1060(980nm Pump) or SMF-28e(for 1480nm Pump) Fiber for Pump Port	
Operating Temperature	℃	0 to +70	
Storage Temperature	℃	-40 to +85	

*Above specifications are for device without connector.
*For devices with connectors, IL will be 0.3dB higher, RL will be 5dB lower,ER will be 2dB lower.
*The PM fiber and the connector key are aligned to the slow axis.

Package Dimensions

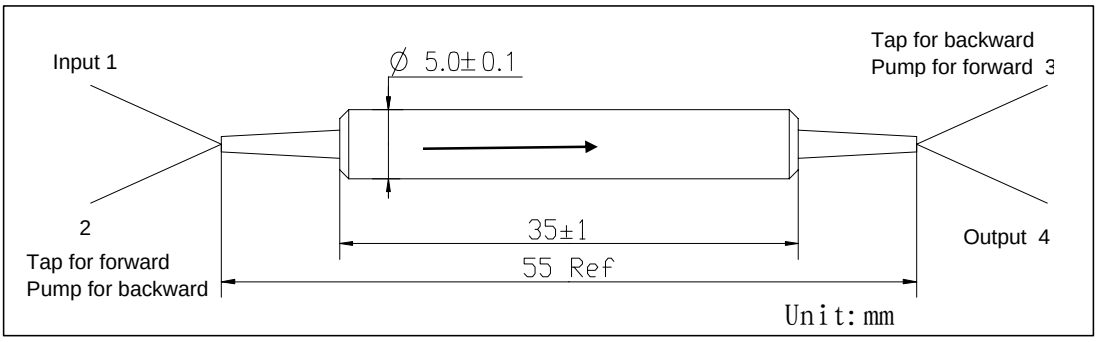

Ordering Information

PMTIWDM-①①①① -②-③-④④-⑤-⑥⑥⑥⑥ -⑦⑦⑦⑦-⑧

①①①①: Signal & Pump Wavelength
5598 - 1550nm/980nm
5548 - 1550nm/1480nm

②: Pump Direction
F - Forward Pump
B - Backward Pump (only for Fast Axis Blocked)

③: Stage
S - Single Stage
D - Dual Stage

④④: Tap Ratio
01 - 1%
02 - 2%
05 - 5%
10 - 10%
50 - 50%
SS - Specify

⑤: Axis Alignment
F - Fast Axis Blocked
B - Both Axis Working

⑥⑥⑥⑥: Connector Type on Port 1, 2, 3 & 4
1 - FC/UPC
2 - FC/APC
3 - SC/UPC
4 - SC/APC
N - None
S - Specify

⑦⑦⑦⑦: Fiber Jacket on Port 1, 2, 3 & 4
B - 250um Bare Fiber
L - 900um Loose Tube
S - Specify

⑧: Fiber Length
0.8 - 0.8m
S - Specify

Polarization Maintaining Mini Type Manual Variable Optical Attenuator

Features

Low Excess Loss
High Return Loss
High Extinction Ratio
Excellent Environmental Stability
Compact Package

Applications

Fiber Optics Components
Research
Telecom
Fiber Laser

Specifications

Parameters	Unit	Values		
Operating Wavelength Range	nm	1060	1310	1550
Wavelength Range Tolerance	nm	±30		
Max. Excess Loss	dB	0.6		
Max. Attenuation Range	dB	30		
Max.WDL at 23℃，Minimum Attenuation	dB	0.3		
Resolution Below 10dB Attenuation Range	dB	0.1		
Max.TDL(Minimum Attenuation)	dB	0.5		
Min. Return Loss	dB	50		
Min.ER at 23℃，Minimum Attenuation	dB	20		
Fiber Type	-	Panda Fiber		
Max. Tensile Load	N	5		
Max. Optical Power(CW）	mW	300		
Operating Temperature	℃	0 to 70		
Storage Temperature	℃	-40 to +85 (No Condensing)		

*Above specifications are for device without connector.

*For devices with connectors, IL will be 0.3dB higher, RL will be 5dB lower,and ER is 2dB lower .

*The PM fiber and the connector key are aligned to the slow axis.

Package Dimensions

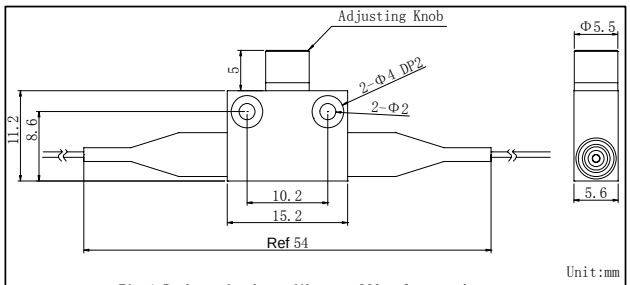

Fig.1 Package for bare fiber or 900um loose tube.

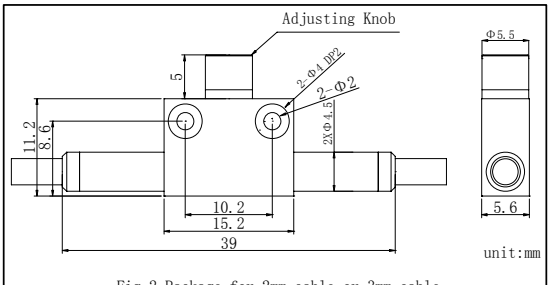

Fig.2 Package for 2mm cable or 3mm cable.

*Tolerance:X—±1mm,X.X—±0.1mm

Ordering Information

PMVOA-①①-②②-③③-④④

①①: Wavelength
06 - 1064nm
31 - 1310nm
55 - 1550nm
3155 - 1310/1550nm
SS - Specify

③③:Fiber Jacket
B - 250um Fiber
L - 900um Losse tube
C - 3mm cable
E - 2mm cable

②②: Connector Type
1- FC/UPC
2 - FC/APC
3 - SC/UPC
4 - SC/APC

④④:Fiber Length
0.8 - 0.8m
S - Specify

Optizone Twin Polarization Maintaining Isolator

Features

High Isolation
Low Insertion Loss
High Extinction Ratio
Low Cost

Applications

Fiber Optic Lasers
Fiber Amplifiers
Fiber Sensors
Research

Specifications

Parameters	Unit	Values	
Stage		Single Stage	Dual Stage
Center Wavelength	nm	1310, 1480 or 1550	
Operating Wavelength Range	nm	±20	
Typ. Peak Isolation (Port 4 to Port 1, Port 3 to Port 2)	dB	42	58
Min. Isolation (Port 4 to Port 1, Port 3 to Port 2) at 23℃	dB	28	48
Typ. Insertion Loss (Port 1 to Port 4, Port 2 to Port 3) at 23℃	dB	0.45	0.55
Max. Insertion Loss (Port 1 to Port 4, Port 2 to Port 3)	dB	0.65	0.75
Min. Return Loss (Input/Output)	dB	50	50
Min. Directivity (Port 1 to Port 2, Port 3 to Port 4) at 23℃	dB	50	50
Min. Crosstalk (Port 1 to Port 3, Port 2 to Port 4) at 23℃	dB	50	50
Min. Extinction Ratio (only for B-Type)	dB	20	20
Min. Extinction Ratio (only for F-Type)	dB	22	22
Max. Optical Power (CW)	mW	500	
Max. Tensile Load	N	5	
Fiber Type		PM Panda Fiber	
Operating Temperature	℃	-5 to +70	
Storage Temperature	℃	-40 to +85	

*Above specifications are for device without connector.

*For devices with connectors, IL will be 0.3dB higher, RL will be 5dB lower and ER will be 2dB lower.

*The PM fiber and the connector key are aligned to the slow axis.

Package Dimensions

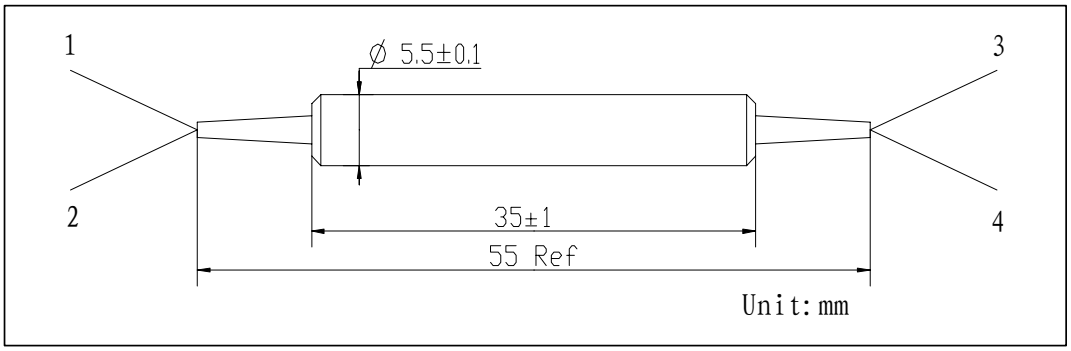

Ordering Information

TPMI-①①-②-③-④④④④-⑤⑤⑤⑤-⑥

①①: Wavelength
31 - 1310nm
48 - 1480nm
55 - 1550nm
SS - Specify

②: Stage
S - Single Stage
D - Dual Stage

③: Axis Alignment
F - Fast Axis Blocked
B - Both Axis Working

④④④④: Connector Type on Port 1 & 2
1 - FC/UPC
2 - FC/APC
3 - SC/UPC
4 - SC/APC
N - None
S - Specify

⑤⑤⑤⑤: Fiber Jacket on Port 1 & 2
B - 250um Fiber
D - 400um Fiber
L - 900um Loose Tube
S - Specify

⑥: Fiber Length
0.8 - 0.8m
S - Specify