Celius NL Product Line

Single Mode Green CW 532 (515-561) nm fiber laser module
Celius-NL-5xx series

Key features

- TEM_{00} mode
- Narrow linewidth (<0.1 nm)
- High beam quality (M^2<1.1)
- Output power up to 3W
- High power stability
- High reliability

Celius-NL-5xx series is a high beam quality green fiber lasers. Any desired wavelength within the range 515 nm - 561 nm can be selected as the central operating wavelength for a particular model. The Celius green beam laser series are manufactured using our fiber optical technology, a proprietary technology for intra-cavity doubling of the unpolarised Yb-doped fiber laser with the linearly polarized green output (patent pending). Celius key parameter is high beam quality and high power stability. Celius-NL-5xx controlled by the onboard digital display, switches, and adjustment controllers.The control interface software provides optionally. Celius-NL-5xx is a perfect tool for research labs due to excellent performance, high reliability, and lower cost.

Applications

- Spectroscopy
- Flow cytometry
- Holography
- Interferometry
- Other

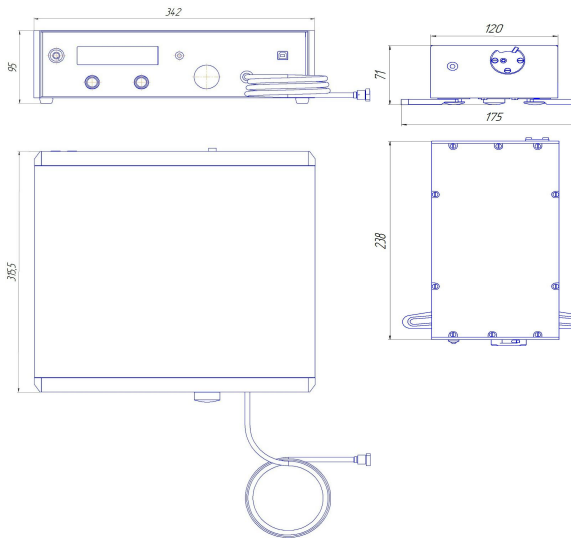

© 2015 Optromix, Inc. 2464 Massachusetts Ave., Cambridge, MA 02140 USA Tel: +1 617 558 98 58
e-mail: info@optromix.com www.optromix.com lasers4lab.com

Celius-NL-5xx specification

Parameter	Celius-NL-5xxM
Operating mode	CW, TEM_{00}
Central wavelength	Any within the range 515 nm - 561 nm
Linewidth (FWHM)	< 0.1 nm
Nominal output power	50mW, 100mW, 15 mW, 300mW, 500mW, 1W, 2W, 3W
Output power tunability	10-100%
Long term instability	< 1%
Polarization	Linear
Beam quality (M^2)	< 1.1
Control interface	Front panel with display, (RS232, USB (optional)
Operating voltage	110-130, 220 -240 Volt, 50-60 Hz, Single Phase
Operation temperature	10 - 50 ^{0}C
Storage temperature	- 40 - +70 ^{0}C
MTBF	> 10.000 Hrs
Operation Humidity	10 - 85 %
Cooling	Forced air
Dimensions (WxHxL)	342x95x316 mm, 120x71x238 mm
Weight	< 10 kg

- Optromix fiber systems can be customized by request.
- Warranty: 1 year.

Ordering Information:

Product Code	**Celius-NL-5xx-yyyy-cc**	xx:	Wavelength (nm)
		yyyy:	Output power (mW)
		cc:	Optical output: FO - fiber output, CM - collimator, FS - free space, FA = FC/APC FU = SC/UPC, SA = SC/APC SU = SC/UPC

Information in this document is a subject to change without notice.

© 2015 Optromix, Inc. 2464 Massachusetts Ave., Cambridge, MA 02140 USA Tel: +1 617 558 98 58
e-mail: info@optromix.com www.optromix.com www.lasers4lab.com