smart vision lights

MOBL *Maximum Output* BACKLIGHT

PRODUCT DATA SHEET

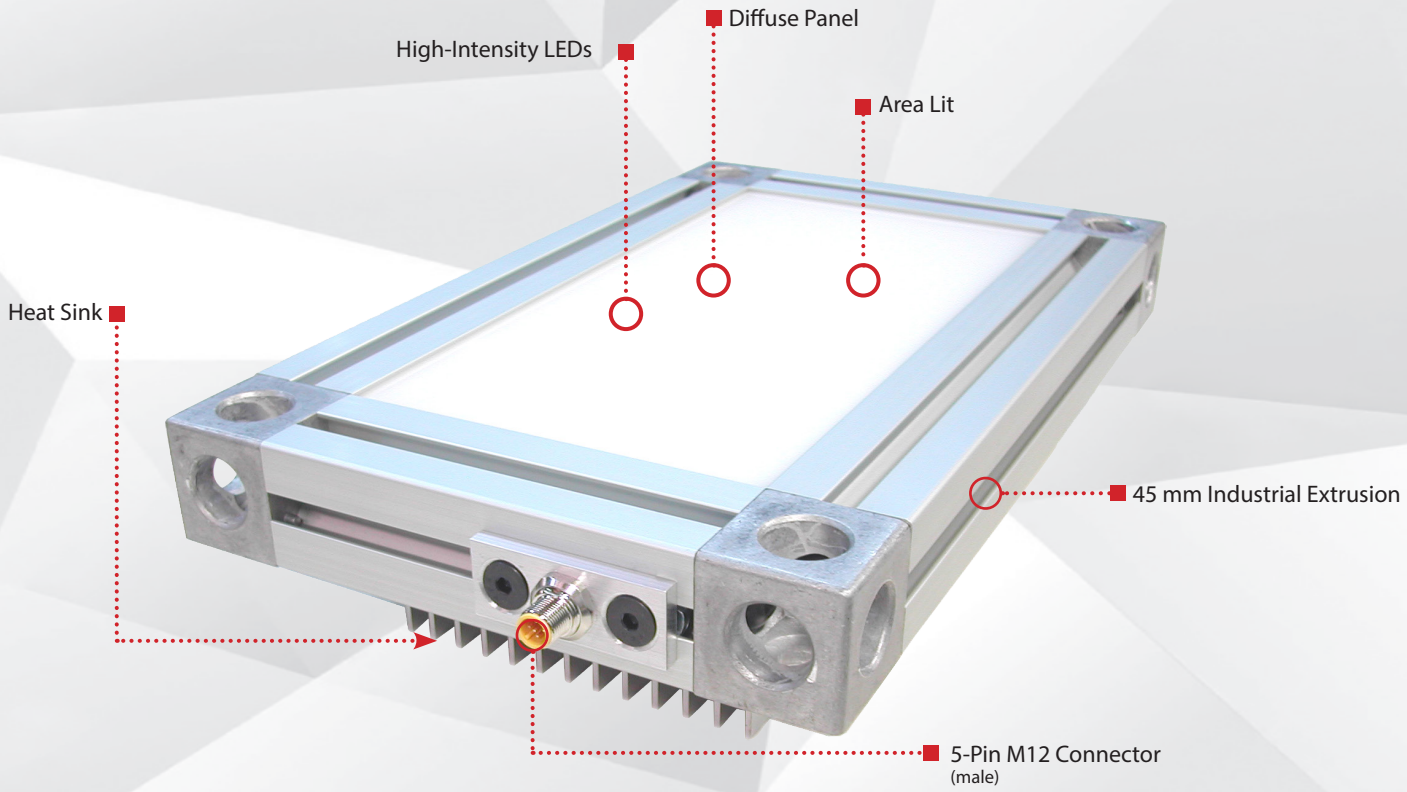

Warranty	Compliant	Compliant	Rated	Connector
10 YEAR	IEC 62471	CE RoHS	IP 50	5-PIN M12

PRODUCT HIGHLIGHTS

- ✓ Built-in driver
- ✓ PNP and NPN strobe input
- ✓ 45mm industrial extrusion for mounting
- ✓ 5-pin M12 quick connect
- ✓ Custom sizes available

PRODUCT DESCRIPTION

The MOBL Backlight Series is designed for maximum output. The series works in continuous operation mode or can operate with either an NPN or PNP trigger signal when using on/off input mode. The MOBL Backlight runs on an industry-standard 24VDC. The 1–10VDC analog control line gives the user total control over intensity. Proper heat dissipation is achieved using the side extrusion and the heat sink installed on the bottom of the light. The 45 mm extrusion makes mounting the light easy when using drop-in T-nuts. The MOBL Backlight has a built-in driver. No external driver is required.

PRODUCT SPECIFICATIONS

Electrical Input	24VDC +/–5%
On/Off Input	PNP: +4VDC or greater to activate | NPN: GND (<1VDC) to activate
PNP Line	4 mA @ 4VDC | 10 mA @ 12V DC | 20 mA @ 24VDC
NPN Line	15 mA @ ground (0VDC)
Continuous Mode	NPN can be tied to ground **OR** PNP can be tied to 24VDC (not both)
Analog Intensity	The output is adjustable from 10%–100% of brightness by a 1–10VDC signal. (Jumpering pin 5 to pin 1 will provide maximum intensity)
Connection	5-pin M12 connector
Ambient Temperature	-18º–40º C (0º–104º F)
IP Rating	IP50
Compliances	CE, RoHS, IEC 62471
Warranty	10 year warranty. For complete warranty information, visit smartvisionlights.com/warranty.

Standard Light Sizes	Input Current	Wattage	Weight
150 mm x 150 mm	1.1 A	26.4 W	~3.08 kg
300 mm x 150 mm	2.2 A	52.8 W	~4.80 kg
300 mm x 300 mm	4.4 A	106 W	–

WIRING CONFIGURATION

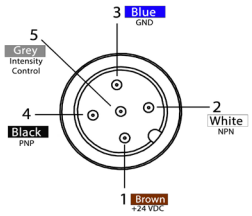

Pin layout for light (Male Connector)

Pin	Function	Signal	Wire Color
1	Power In	+24VDC	BROWN
2	NPN	Sinking Signal	WHITE
3	GND	Ground	BLUE
4	PNP	Sourcing Signal	BLACK
5	Intensity Control	1–10VDC	GREY*

**Some cables use green/yellow for pin 5.*
For maximum intensity, tie pin 5 to pin 1 at +24VDC.
*For continuous mode, PNP (pin 4) can be tied to +24VDC (pin 1) **or** NPN (pin 2) can be tied to Ground (pin 3).*

OPTIONAL

For maximum intensity, connect pin 5 to pin 1 at 24VDC.

RESOURCE CORNER

Additional resources, including CAD files, videos, and application examples, are available on our website.

PRODUCT DRAWING

CAD files available on our website.
Dimensions are in mm.

150 mm x 150 mm

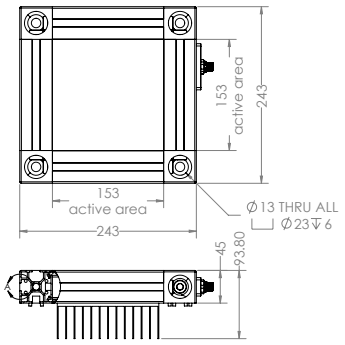

300 mm x 150 mm

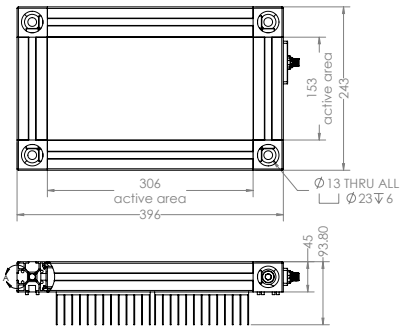

300 mm x 300 mm

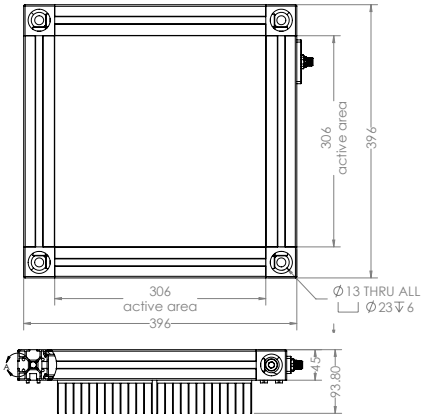

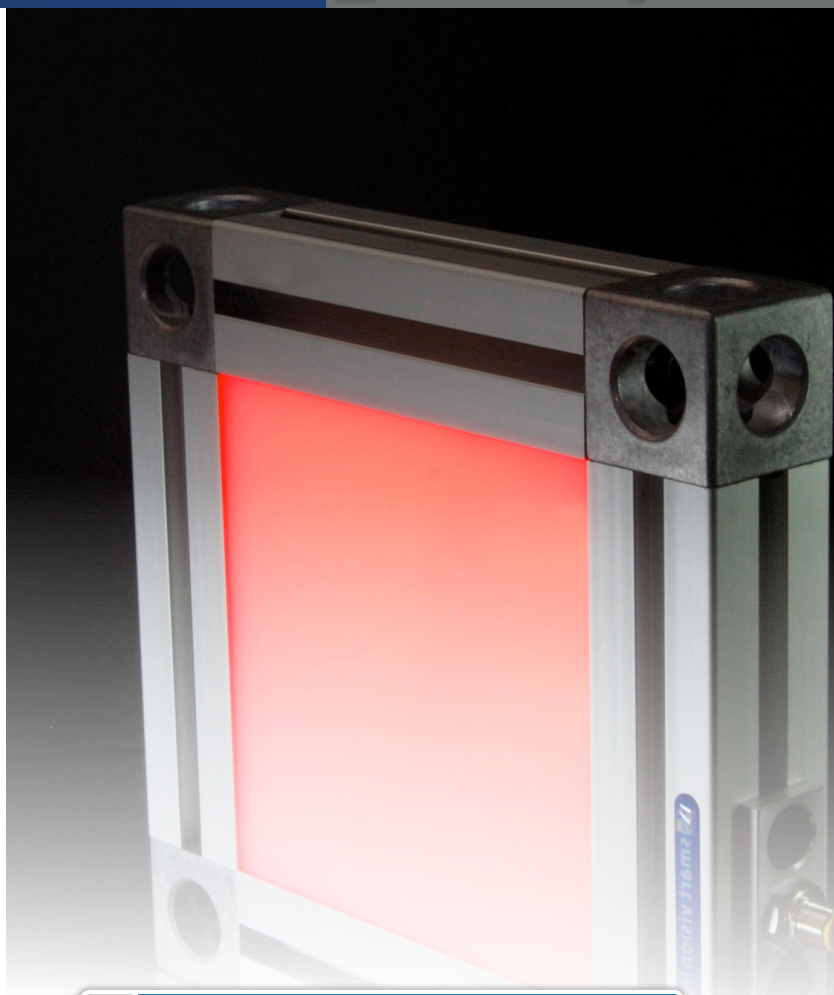

ILLUMINATION

MOBL Series of Backlights works best for:

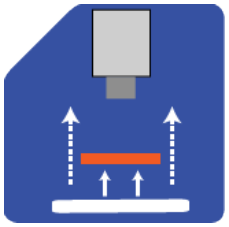

Backlight

EYE SAFETY

SMART VISION LIGHTS IEC 62471 COMPLIANT

According to IEC 62471: 2006. Full documentation available upon request.

Notice

Exempt Group: No photobiological hazard to eyes or skin even for continuous, unrestricted use. Applicable for wavelengths 625, 850, 940, 1050, 1200, 1300, 1450, and 1550.

Caution

Risk Group 1: Possibly hazardous optical radiation emitted from this product. Do not stare at operating lamp. May be harmful to eyes. Safe for most applications except for prolonged exposure. Applicable for wavelengths 470, 505, 530, and WHI.

PART NUMBER

MOBL – □□□ X □□□ – □□□ – □□□ X □□ – □□

SIZE (L x W):
- 150 x 150
- 300 x 150
- 300 x 300
- Custom sizes upon request

COLOR:
WHI, 470, 505, 530, 625, 850

PATTERN AREA LIGHTING™:
Leave blank for no pattern

Part Number Examples:

MOBL-150x150-625	MOBL, 150 x 150 mm, 625 nm Red Wavelength
MOBL-150x150-WHI-215x15-10	MOBL, 150 x 150 mm, White, Pattern Area Light with 15 mm grid (dark lines), 15 mm light gap and 10% gradient

The 5-pin M12 connector is located on the wide side of the light.
Sizes listed are in millimeters.
Additional wavelengths and sizes available upon request.

PATTERN AREA LIGHTING:

□□□ X □□ – □□

TYPE
1 – Line
2 – Grid
3 – Checker Board
4 – Circles

DARK LINE	LIGHT GAP	GRADIENT
01 – 1 mm	01 – 1 mm	Leave blank for no gradient
02 – 2 mm	02 – 2 mm	10 – 10%
05 – 5 mm	05 – 5 mm	15 – 15%
10 – 10 mm	10 – 10 mm	20 – 20%
15 – 15 mm	15 – 15 mm	25 – 25%
20 – 20 mm	20 – 20 mm	50 – 50%
25 – 25 mm	25 – 25 mm	

Dark Line – Printed dark line size in millimeters
Light Gap – Light gap width in millimeters
Gradient – Percentage of dark line to be gradient

CUSTOMIZE

Smart Vision Lights can customize a MOBL to the size you need. When requesting a custom MOBL, include the following: size (length x width) in millimeters, what side the 5-pin M12 connector should be placed on, and desired wavelength (color).

OPTICAL PERFORMANCE

The MOBL offers a very diffuse light pattern.

OPTICAL PERFORMANCE FOR THE MOBL

Rating	Illuminance (Lux)
Average Intensity Rating	70,000
Illuminance measurement taken at surface of MOBL	

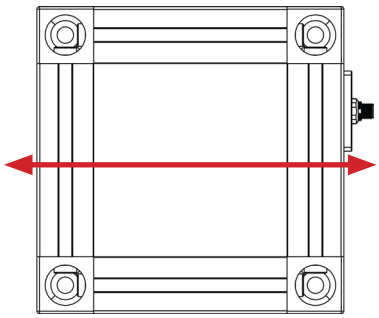

MOBL–150x150

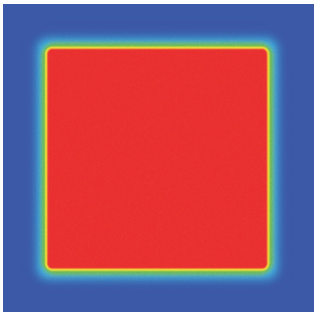

MOUNTING

Smart Vision Lights recommends using **drop-in T-nuts** for mounting a MOBL Backlight. The MOBL extrusion has a Bosch size 10 T-nut channel.

NOTE

Removing cover cubes of light may result in voiding of warranty.

Bosch size 10 T-nut channel

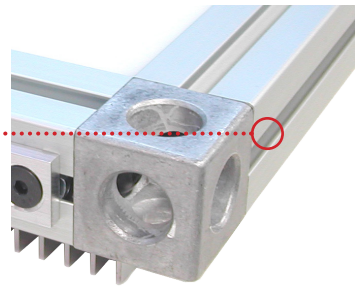

AREA LIT

LEDs are placed to disperse light evenly throughout the lighted surface area.

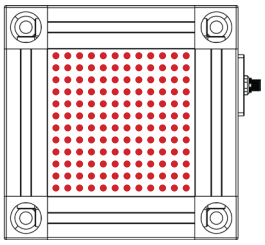

MOBL–150 x150 shown
(LED size and spacing not shown to scale)

PATTERN AREA LIGHTING

Pattern Area Lighting (PAL) is used for isolating defects on uneven, highly specular, and/or clear surfaces, which can be difficult with standard lighting methods. PAL allows for isolating a defect in a single image acquisition. With PAL, small defects will reflect off the surface at an equal but opposite angle. Distortion of the reflected image can also reveal surface deformations.

How to use PAL

- For backlighting a transparent object, the light is positioned beneath the object.
- For front lighting, position the light where the light pattern will be directed on the surface at an angle.
- A camera is positioned to capture the reflection of the light source.
- The camera lens is adjusted to focus on the surface defect.
- The camera should also image the light source pattern, but the pattern does not need to be in tight focus.
- The depth of field for the lens should be adjusted to include both the light source pattern and the defect in one im-

REFLECTIVE

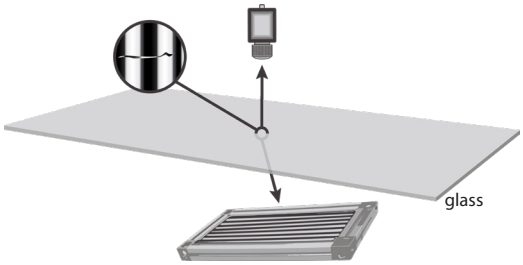

TRANSPARENCY

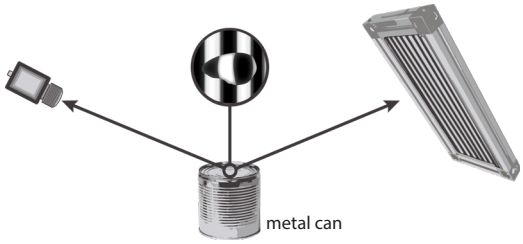

Pattern Area Lighting Examples

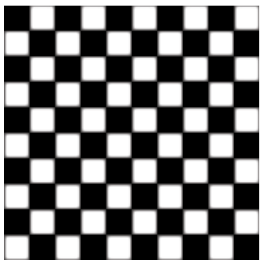

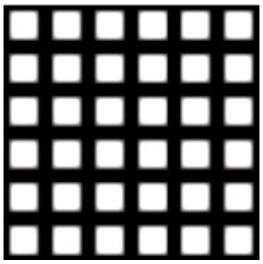

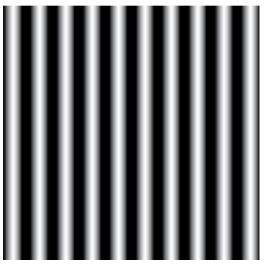

Pattern:	Checker Board	Grid	Gradient Lines	Circles
Size:	50 mm x 50 mm square	50 mm line width	50 mm line width	50 mm circle thickness

Customized line and circle sizes available upon request.

NOTE

Smart Vision Lights can customize just about any pattern needed to meet application requirements.

ACCESSORIES

Power Cables

Length	Part Number
5 m	5PM12-5
10 m	5PM12-10
15 m	5PM12-15

GLOSSARY

This glossary covers all Smart Vision Lights product families; some content in this section may not apply to this specific light.

TERMINOLOGY

OverDrive™ Lights include an integrated high-pulse driver for complete LED light control.
Continuous Operation Lights stay on continuously.
Multi-Drive™ Combines continuous operation and OverDrive™ strobe (high-pulse operation) mode into one easy-to-use light.
Built-In Driver The built-in driver allows full function without the need of an external controller.
Camera to Light Connecting the light directly to the camera, without the need for additional controllers or equipment.
Polarizers Filters that reduce reflections on specular surfaces.
Diffuser Used to widen the angle of light emission, reduce reflections, and increase uniformity.

TYPES OF ILLUMINATION

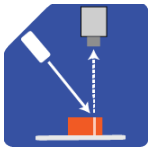
Projector

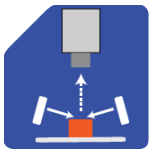
Dark Field

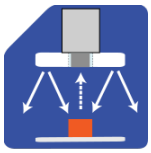
Radial

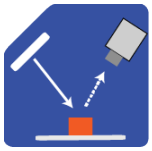
Bright Field

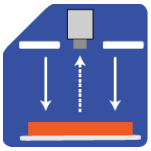
Direct

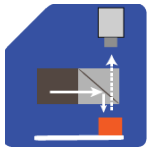
Axial

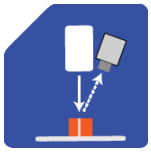
Line

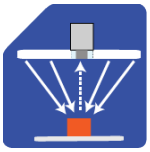
Diffuse Panel

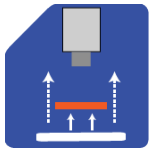
Backlight

COMMON COLOR/WAVELENGTHS LEGEND

Wavelength options range from 365 nm to 1550 nm.
Additional wavelengths available for many light families.

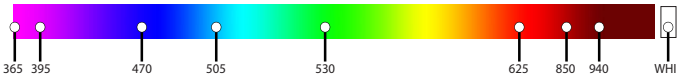

*See Part Number section for **this light's** available standard wavelengths.*

SWIR SHORTWAVE **INFRARED**

Shortwave infrared LEDs are available in 1050 nm, 1200 nm, 1300 nm, 1450 nm, and 1550 nm.
*Check Part Number section to see if **this light** is available in SWIR wavelengths.*