POCKELS CELL DRIVER PCD-041D WITH TWO-STEP PULSE AND VOLTAGE DOUBLING

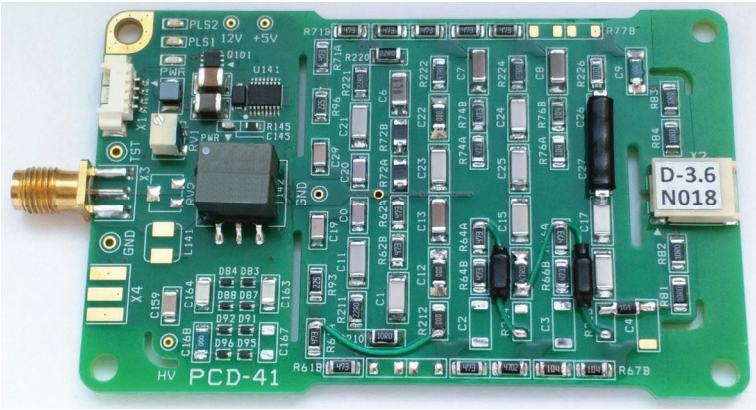

APPLICATION

Generation of a two-step high-voltage pulse with nanosecond rising edges. First step duration of the output high-voltage pulse is determined by trigger pulse duration. Second step amplitude of the output HV pulse is equal to the double voltage of first step.
Driver can be used for ultrafast optical beam modulation and deflection, control of laser regenerative amplifiers and pulse pickers.

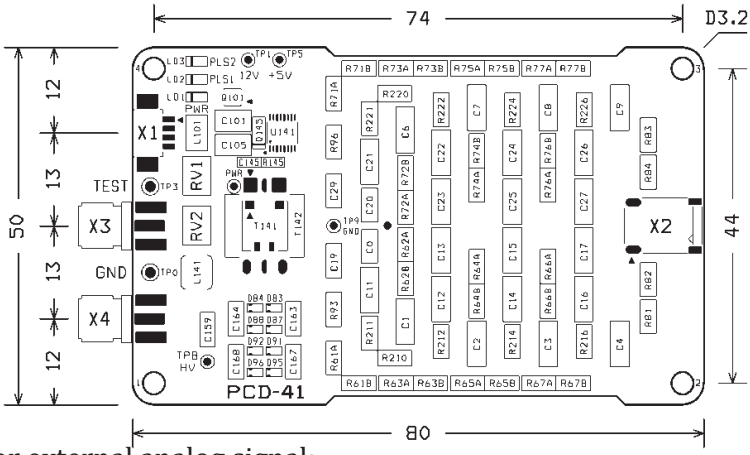

DISTINCTIVE FEATURES

- ✓ Two-step high voltage pulse;
- ✓ Nanosecond rising edges;
- ✓ Controlled pulse duration;
- ✓ Pulse jitter is less than 200 psec;
- ✓ Built-in pulsed high voltage source;
- ✓ Low voltage power supply 12 V;
- ✓ Trigger pulse 5 V, impedance 50 Ω;
- ✓ Pulse repetition rate up to 1000 Hz.
- ✓ Pulse amplitude adjustment by trimmer or external analog signal;
- ✓ Additional output signal for HV pulse amplitude measurement;

TECHNICAL SPECIFICATIONS

- Output amplitude of the first step [1] ..... 2800 ÷ 3600 V
- Output amplitude of the second step (double voltage of first step) [1] ..... 5600 ÷ 7200 V
- Unevenness of the amplitude on the plateau ..... < 5 %
- Output voltage pulse-to-pulse instability ..... < 1 %
- Max pulsed current ..... 20 A
- Optimal load capacitance ..... 4 ÷ 12 pF
- HV pulse rise time of first step [2] ..... 1 ÷ 3 nsec
- HV pulse rise time of second step [2] ..... 1 ÷ 3 nsec
- Pulse duration of the first step [3] ..... 2 ÷ 600 nsec
- Duration of the second step plateau ..... ≈ 1000 nsec
- Max HV pulse repetition rate [2] ..... 1000 Hz
- Trigger voltage (input impedance is 50 Ω) ..... 5V (4.5 ÷ 5.5 V)
- Output pulse delay vs. trigger pulse [4] ..... 15 ÷ 20 nsec
- HV pulse jitter ..... < 0.2 nsec
- External power supply voltage ..... 12 VDC (8 ÷ 16 VDC)
- External power supply current ..... 500 mA
- Operating temperature range ..... –40 ÷ +60 °C
- Dimensions ..... 80 × 50 × 15 mm
- Mounting hole pattern (∅ 3.2 mm) ..... 74 × 44 mm
- Weight (OEM version) ..... 100 g

[1] HV amplitude is controlled by built-in trimmer RV1. The range of voltage corresponds to a specific driver model.
[2] Depends on the load impedance and output voltage amplitude.
[3] Is determined by an external trigger-generator.
[4] Delay depends on the trigger pulse and HV output amplitudes. The higher the HV output amplitude, the shorter delay.

CONNECTION DIAGRAM

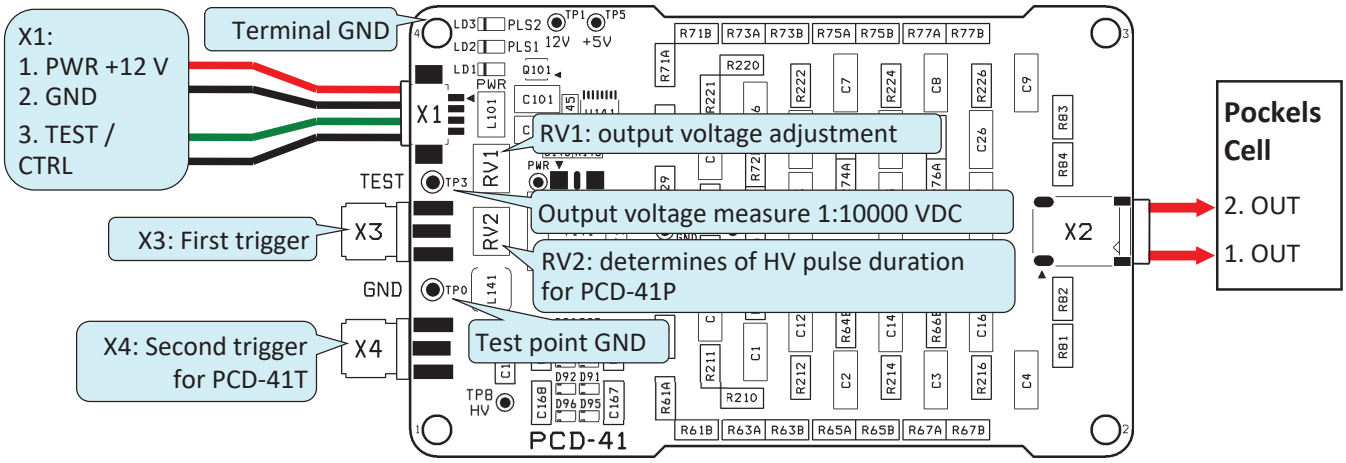

Connector X1 (input) – 53261-0471 (Molex) :
Pin 1 (red) – power supply + 12 V & 500 mA max;
Pin 2 (black) – power supply GND;
Pin 3 (green) – output voltage measure signal; DC voltage scale 1:10000; NOTE 1
Pin 4 (black) – output voltage measure GND.

Connector X2 (output) – SM02B-BHSS (JST) :
Pin 1 (HV red) – first high voltage output;
Pin 2 (HV red) – second high voltage output.

Connector X3, X4 (input) – SMA-J-P-H-ST-EM1 (Samtec) :
Trigger pulse input +5 V; impedance 50 Ω.
Connector X3 – input trigger pulse determines output HV pulse duration for first step.
Connector X4 – not available.

Note 1. Pin 3 and Pin 4 can be used for setting the amplitude of output voltage pulse from –20 % to +2 % (relative to value have been set by trimmer RV1).
If 0 V is set on Pin 3 from an external source, the pulse amplitude will be ~2 % higher than the set value.
If 5 V is set on the Pin 3, the pulse amplitude will be lower by ~20 %.
The input impedance of the Pin 3 is 45kΩ.

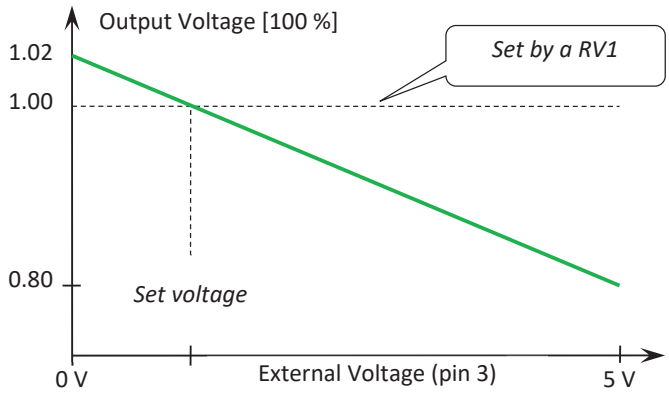

OUTPUT WAVEFORM OF PCD-041D – TWO-STEP PULSE WITH VOLTAGE DOUBLING

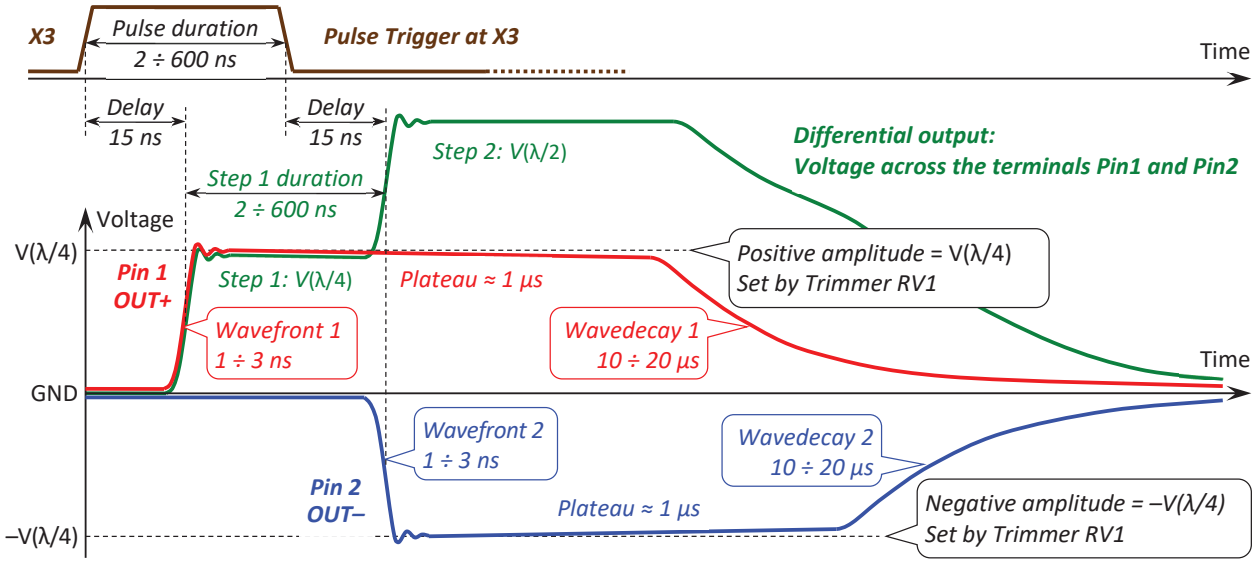

BLOCK DIAGRAM OF PCD-041D – TWO-STEP PULSE WITH VOLTAGE DOUBLING

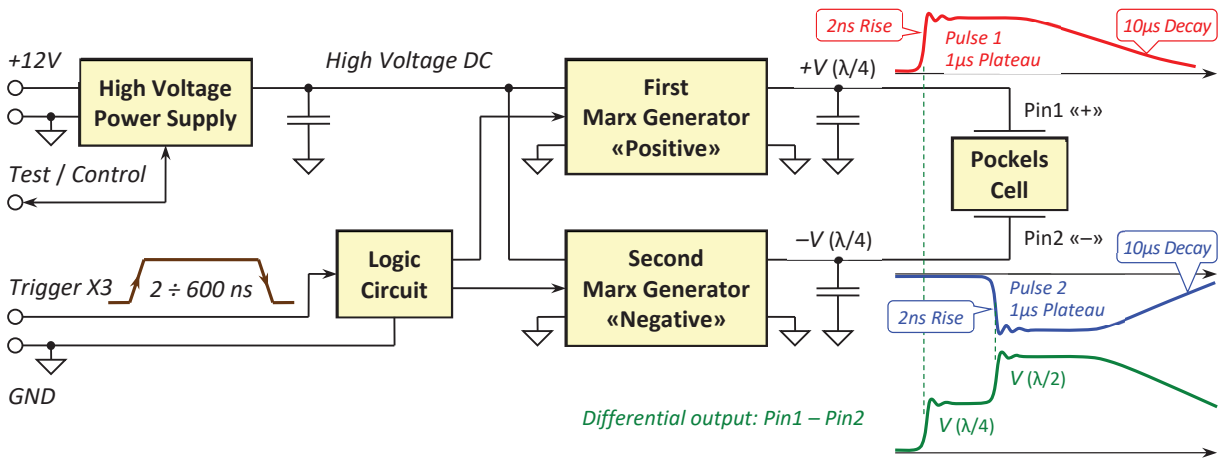

WAVEFORMS OF THE TRANSMITTED LIGHT BEAM

Pulse voltage: V_{OUT} = 2 × 3600 V; Pockels cell half-wave voltage: $V_{\lambda/2}$ = 3800 V