Dual O2/CO2 Monitor, 0-25% and 0-50,000 ppm

ITEM #: 99143

Product Summary

PureAire Monitoring Systems Dual Oxygen/ Carbon Dioxide Monitor is designed for continuous monitoring of oxygen and carbon dioxide in confined spaces. The monitor is ideal for facilities that use inert gases including, but not limited to, nitrogen, helium, carbon dioxide, and argon. The dual O2/CO2 monitor is suitable for environments such as cryogenic facilities, breweries, food processing plants, laboratories, hospitals, and universities. The monitor will remain accurate at temperatures as low as -40C. PureAire's durable, non-depleting, zirconium oxide sensor cell and non-dispersive infrared sensor (NDIR) cell, will last 10+years in a normal environment, without needing to be replaced.

Facilities That Need This Product

- *Pharmaceutical*
- *Hospitals*
- *Aerospace*
- *Cryogenic Facilities*
- *Universities*
- *Food Processing*
- *Breweries and Bars*

FEATURES

- **No maintenance zirconium O2 cell and long life CO2 sensor**
- **No calibration required for oxygen**
- **Self-calibrating CO2 sensor**
- **Local backlit concentration display**
- **Built-in audible horn**
- **Built-in visual LED alarm indicators**
- **Alarm level 1 and 2 for O2 and CO2**
- **No drift due to environmental or temperature changes**
- **3-year warranty**
- **24V DC Power Supply Included**

Why choose PureAire?

PureAire Monitoring Systems, Inc. is an industry leader in oxygen and gas detection. For over 20 years, we have dedicated ourselves to the safety of our clients, and the customers they serve, by manufacturing monitors that are long-lasting, accurate, and reliable. PureAire takes pride in providing exceptional customer service, along with 24/7 availability to our technical service department.

Why a Dual O2/CO2 Monitor?

The dual O2/CO2 monitor is designed for continuous monitoring in confined spaces where low oxygen levels and high carbon dioxide levels pose a hazard to personnel.

What gases can be detected with a Dual O2/CO2 Monitor?

PureAire's Dual O2/CO2 Monitor can be used to monitor CO2, nitrogen, argon, and helium gases.

Easy to Use

The monitor will arrive ready to work right out of the box. Simply secure the unit to the wall 3-5 feet from the gas source, plug it in, and power it on. The monitor will begin sampling O2/CO2 levels after a brief startup period. Oxygen/Carbon Dioxide levels are displayed clearly on the screen for easy access and visibility.

Top Advantages of Dual O2/CO2 Monitor

Dual O2/CO2 Monitor Alarm Features

PureAire's Dual O2/CO2 Monitor has 2 adjustable alarm setpoints that can connect to a horn/strobe, 8 channel controller, remote display, or into building systems. Alarm signals also can tie into automatic shut-off valves when oxygen levels fall below the OSHA threshold.

Easy To Use

PureAire's Dual O2/CO2 Monitor provides constant monitoring with little to no adjustments, saving you time and money while allowing the monitor to operate seamlessly. Our quality sensors make this the longest lasting monitor on the market.

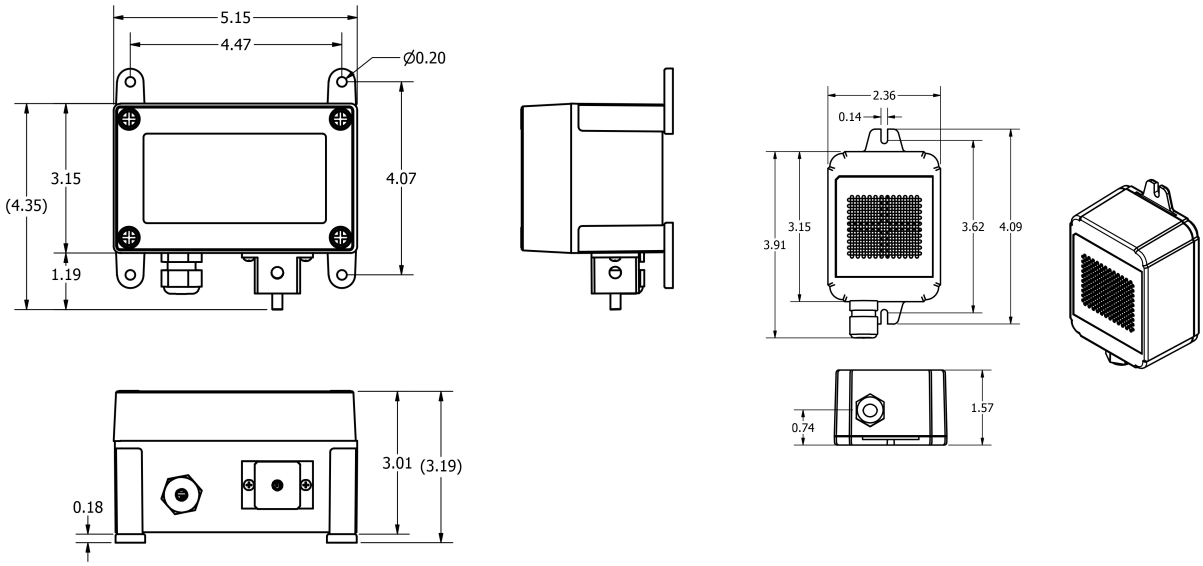

Top Accessories

8 Channel Programmable Controller for O2 or Gas Monitors

ITEM #: 99058

Remote Digital Display

ITEM #: 99091

Red Horn/ Strobe 24VDC

ITEM #: 42002

PureAire monitoring systems, inc.

1-888-788-8050

info@pureaire.net
pureairemonitoring.com

1140 Ensell Road
Lake Zurich, IL 60047
1-847-726-6000