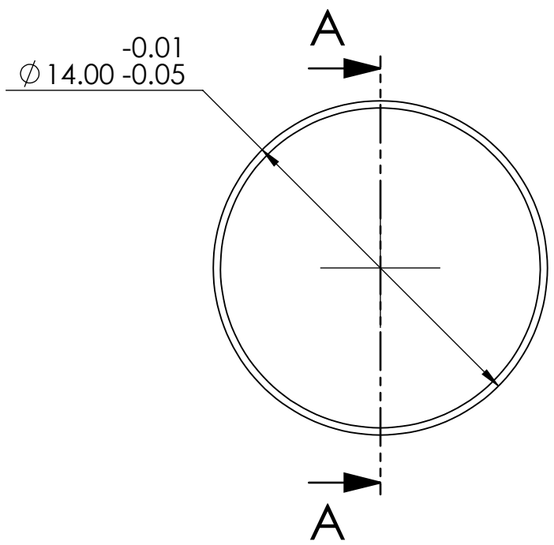

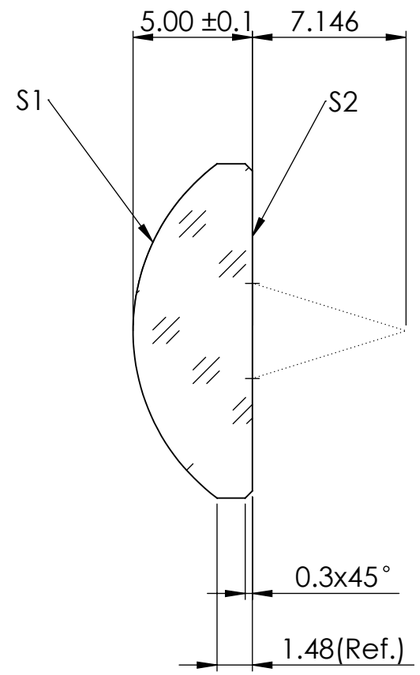

SECTION A-A
SCALE 4 : 1

Aspheric Equation

$$z(r) = \frac{cr^2}{1+\sqrt{1-(k+1)c^2r^2}} + \sum_{i=3}^{8} A_{2i}r^{2i}$$

Aspheric Coefficients		
	S1	S2
R	7.51875	Plano
c	0.1330	
k	-0.5982	
A_6	-3.8046 E-7	
A_8	-4.3282 E-9	
A_{10}	-2.8243 E-11	
A_{12}	2.2271 E-14	
A_{14}	0.0000	
A_{16}	0.0000	

Sagittal Distances of Aspheric Surface		
r (mm)	z (mm)	
	S1	S2
0.0	0.000000	-
1.0	0.066618	-
3.0	0.608086	-
5.0	1.735851	-
7.0	3.528574	-

S1		Material / Lens Data		S2	
Radius of Curvature	7.51875 mm	Glass Type	S-LAL19	Radius of Curvature	Plano
Clear Aperture	12.6 mm	n_d / V_d	1.72916 / 54.09	Clear Aperture	??? mm
Irregularity	< 2 µm P-V	Focal length	10.0 mm ± 1%	Irregularity	< λ/4 P-V
Centering	< 3 arcmin	Numerical Aperture	0.60	Centering	< 3 arcmin
Surface Quality	60-40	Design wavelength	405 nm	Surface Quality	60-40
Coating	None			Coating	None

Dimensions in mm
For Information Purposes Only

PROPRIETARY
THE INFORMATION CONTAINED IN THIS DRAWING IS THE SOLE PROPERTY OF Doric Lenses Inc.. ANY REPRODUCTION IN PART OR AS A WHOLE WITHOUT THE WRITTEN PERMISSION OF Doric Lenses Inc. IS PROHIBITED.

DO NOT SCALE DRAWING

doric
doriclenses.com

TITLE:
APCX_S-LAL19_ 10.0@405_7.14_0.60_5.0_14.0_uncoated

DWG. NO.
D190-4009-000

DATE: 2019.08.07