AK series Aluminum Alloy Crossed-Roller Bearing Linear Stages

FA stage

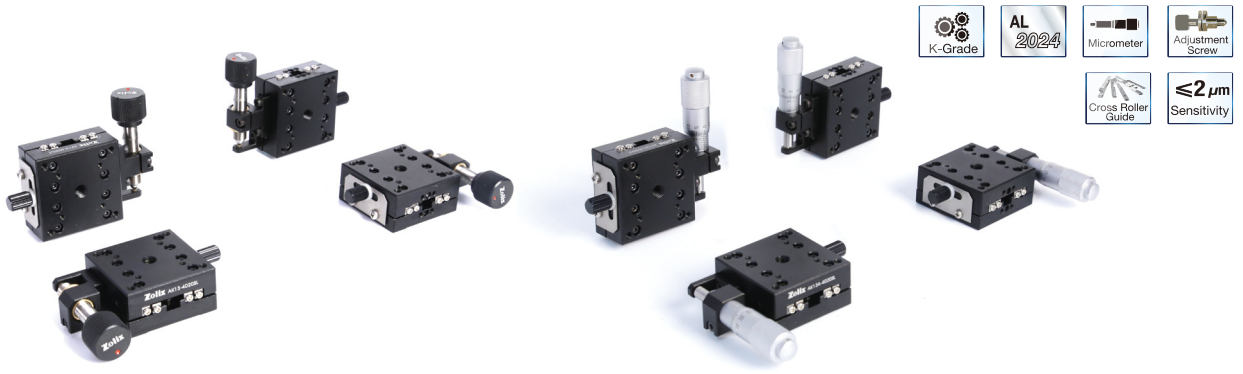

Naming Rules:

AK 13 (A)-40 20 SR

- AK: Aluminum alloy, Crossed-roller bearings, High precision
- Actuators: None: Screw; A: Micrometer
- Thickness: 20: 20mm
- Drive position: C: Center drive; SR: Right drive; SL: Left drive; CZ: Center drive in vertical; RZ: Right drive in vertical; LZ: Left drive in vertical
- Travel: 13: 13mm; 25: 25mm
- Table Size: 40: 40mm×40mm; 60: 60mm×60mm; 65: 65mm×65mm; 80: 80mm×80mm; 100: 100mm×100mm

Selection Table:

Model	AK13(A)-4020(xx)	AK13(A)-6020(xx)	AK25(A)-6520(xx)	AK25(A)-8020(xx)	AK25(A)-10020(xx)
Travel(mm)	13	13	25	25	25
Table Size(mm)	40×40	60×60	65×65	80×80	100×100
Thickness(mm)	20				
Bearings	Crossed-Roller Bearings				
Actuators	Screw (A-micrometer)				
Drive Position	C:Center drive,SR:Right drive,SL:Left drive,CZ:Center drive in vertical, RZ:Right drive in vertical,LZ:Left drive in vertical				
Weight(Kg)	0.12	0.25	0.28	0.5	0.7
Sensitivity(μm)	≤2				
Motion parallelism(μm)	≤10				
Straightness (μm)	≤3				
Pitch(")	≤25				
Yaw(")	≤15				
Horizontal Load(Kg)	2	5	6	10	15
Vertical Load(Kg)	1	2	2.5	5	7

Dimensions:

AK13-4020C

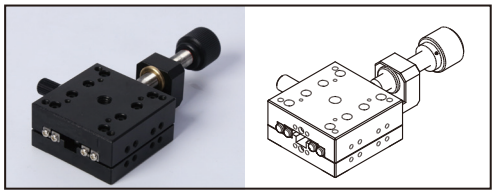

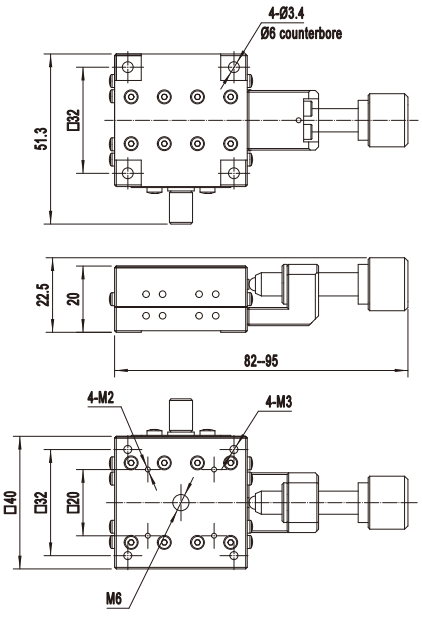

AK13A-4020C

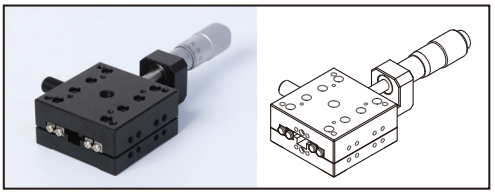

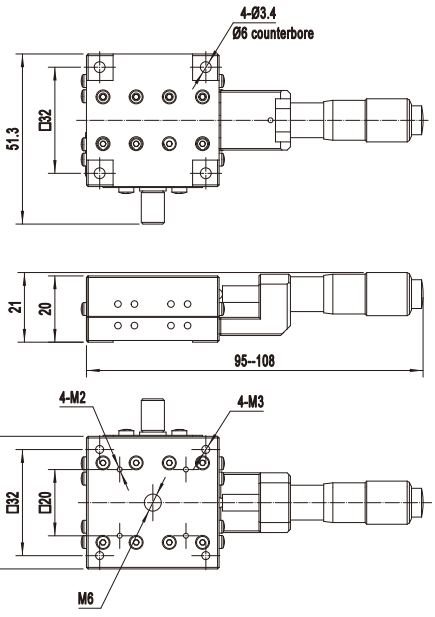

AK13-4020SR

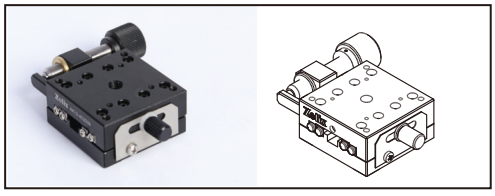

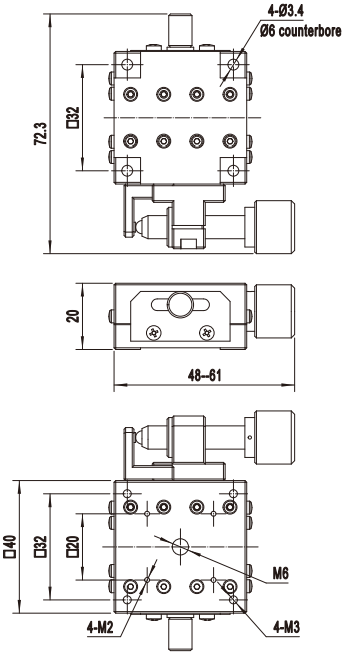

AK13A-4020SR

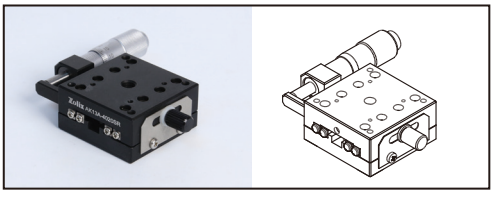

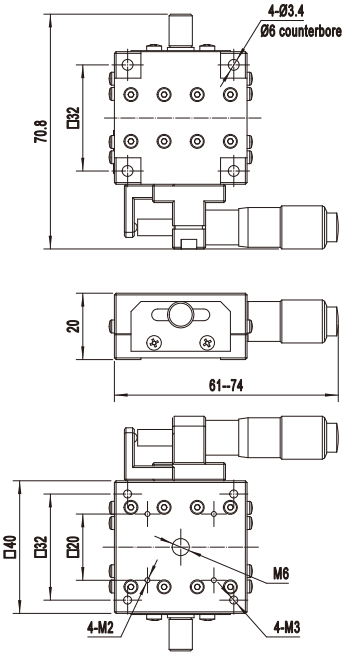

AK13-4020SL

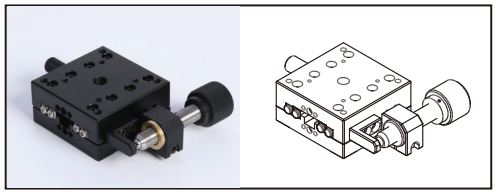

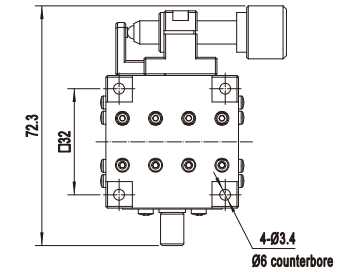

AK13A-4020SL

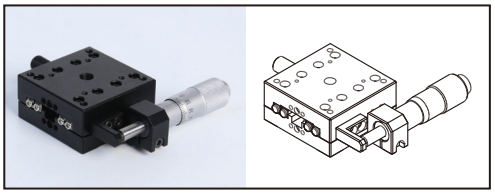

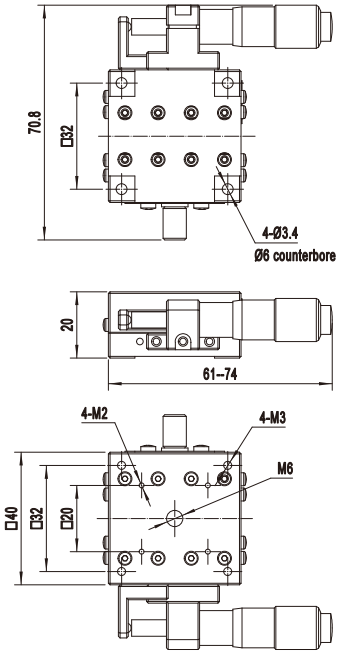

AK13-4020CZ

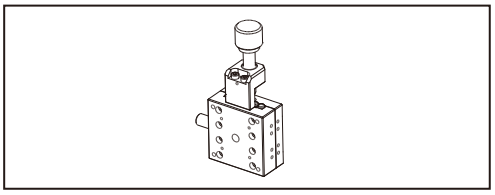

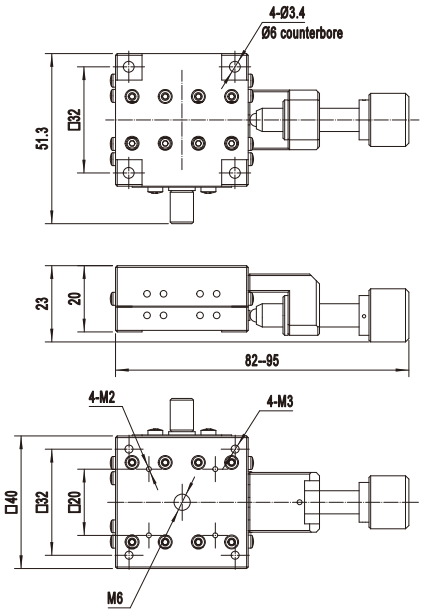

AK13A-4020CZ

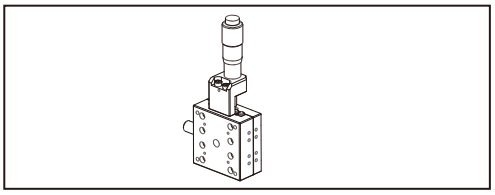

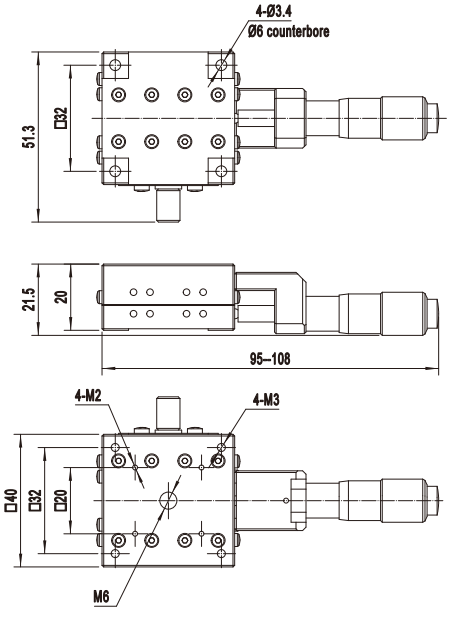

AK13-4020RZ

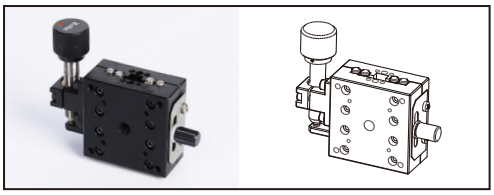

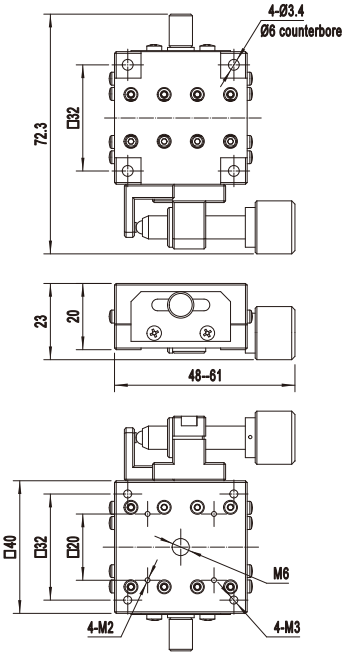

AK13A-4020RZ

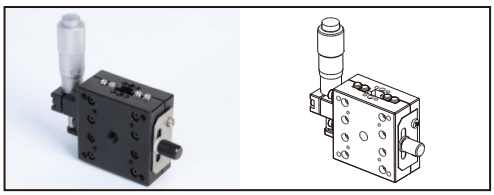

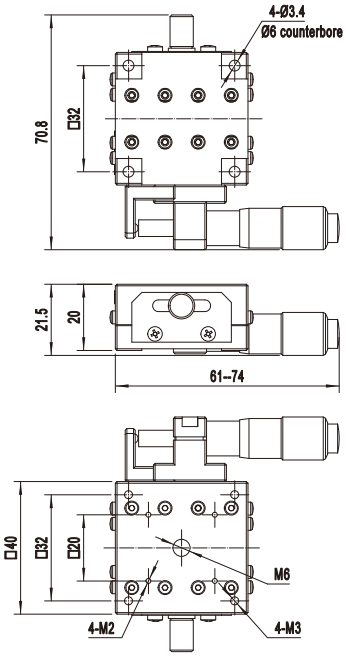

AK13-4020LZ

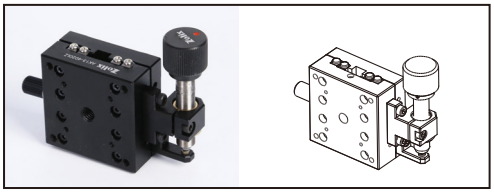

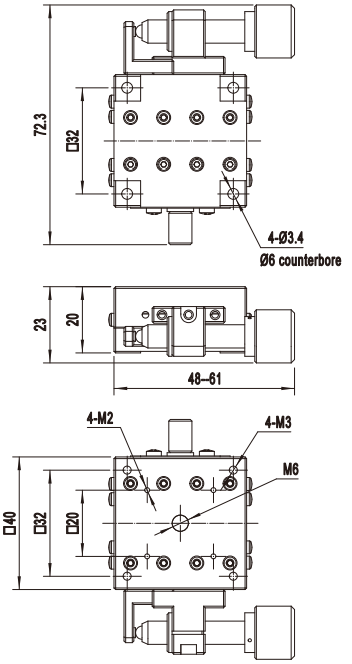

AK13A-4020LZ

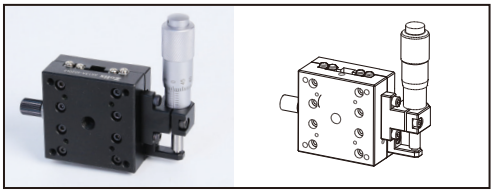

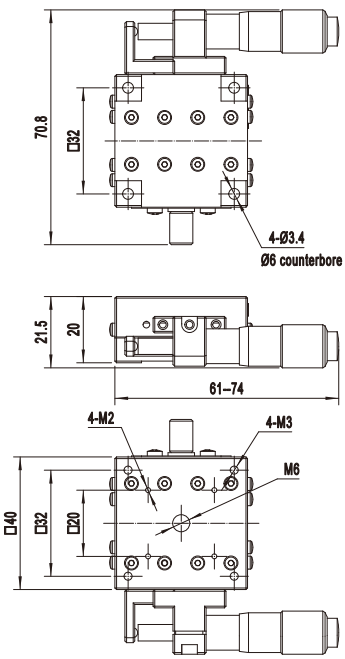

Tel: 010 56370168 www.zolix.com.cn

AK13-6020C

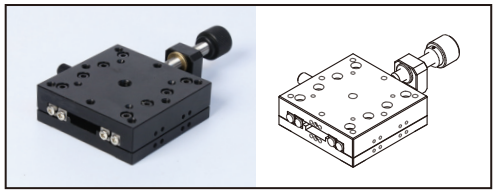

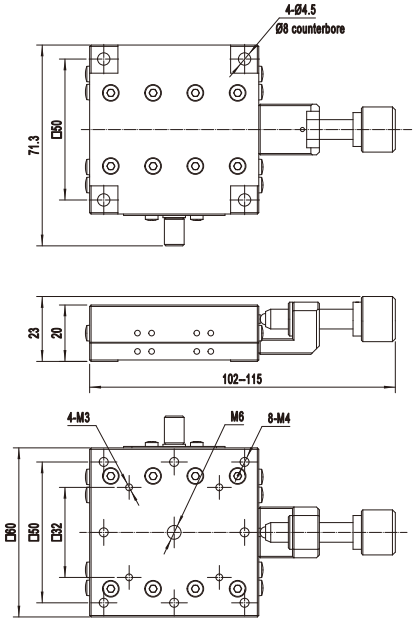

AK13A-6020C

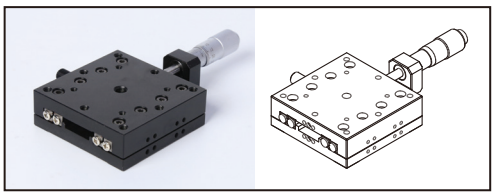

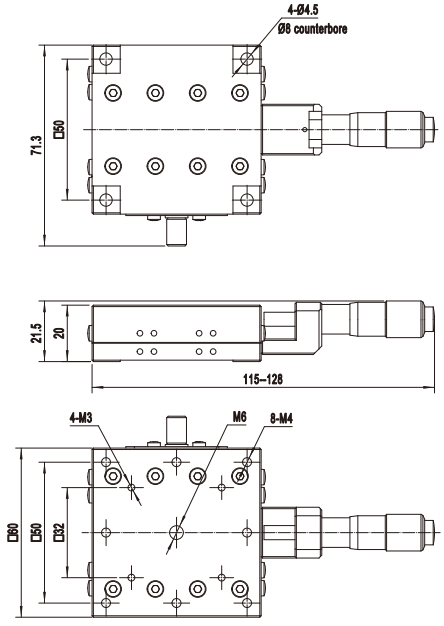

AK13-6020SR

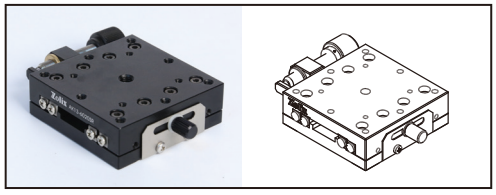

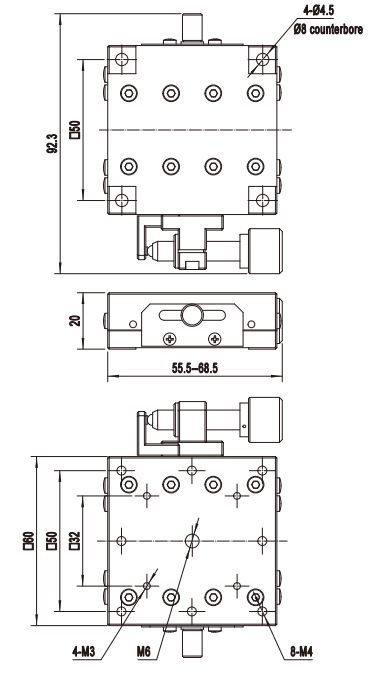

AK13A-6020SR

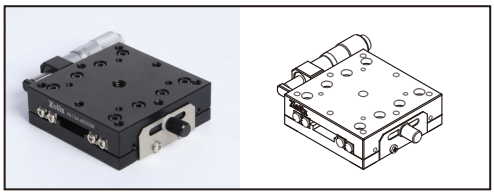

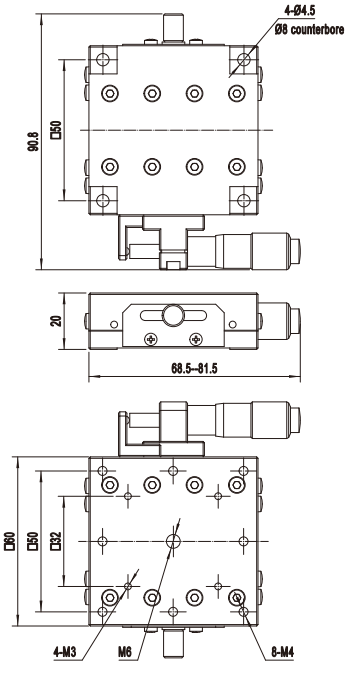

AK13-6020SL

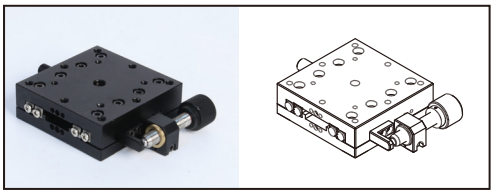

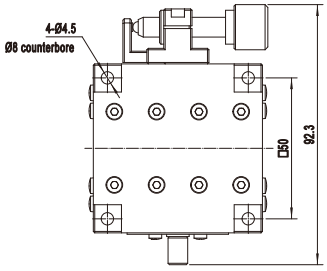

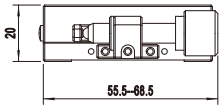

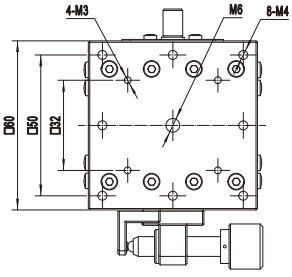

AK13A-6020SL

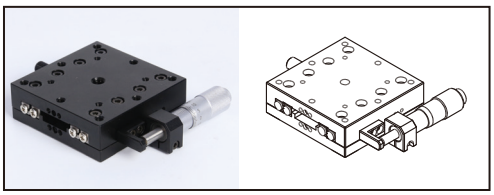

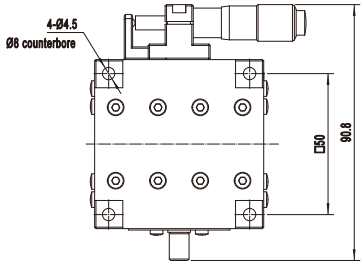

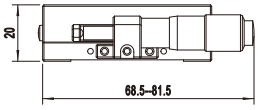

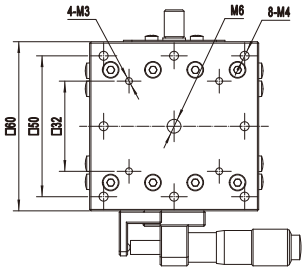

AK13-6020CZ

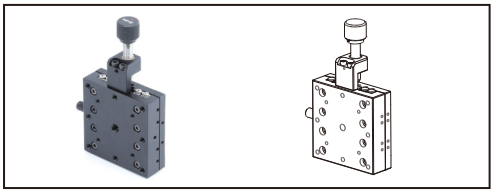

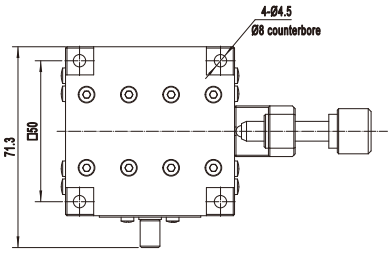

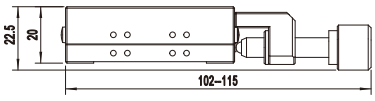

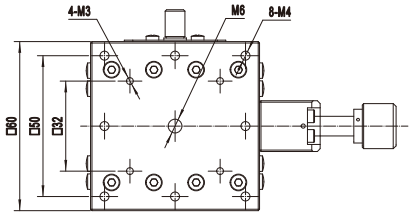

AK13A-6020CZ

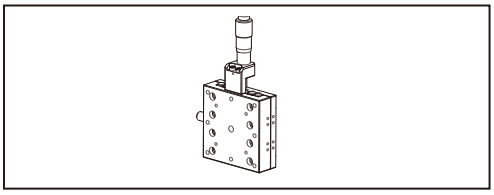

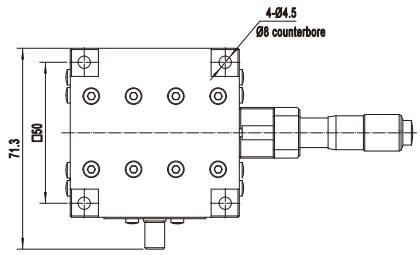

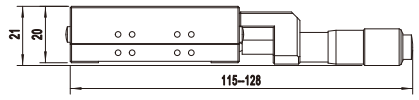

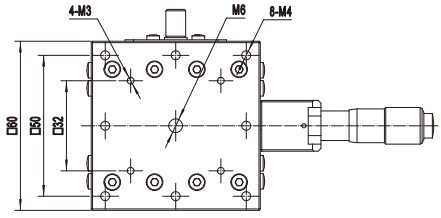

AK13-6020RZ

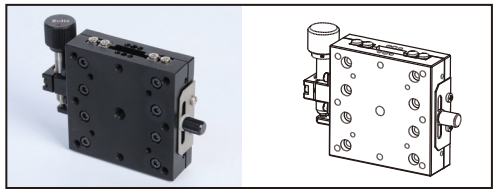

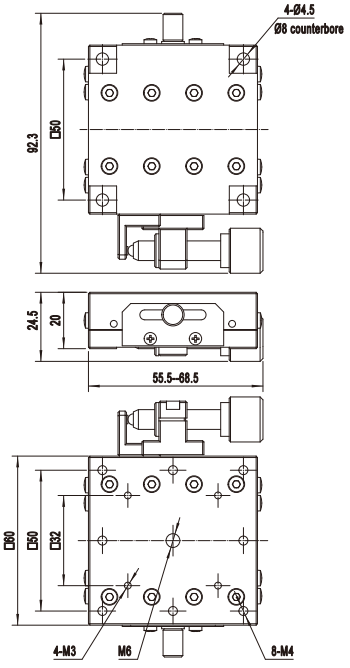

AK13A-6020RZ

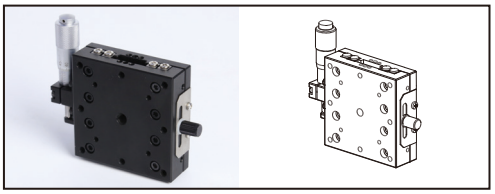

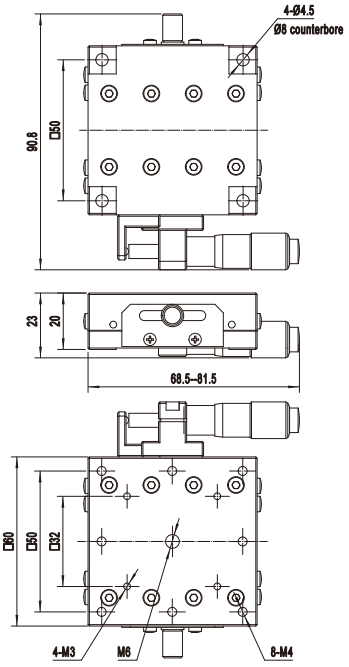

AK13-6020LZ

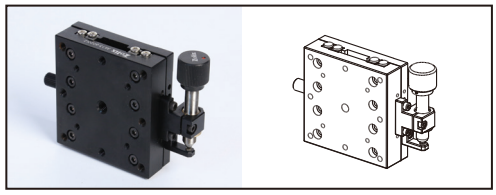

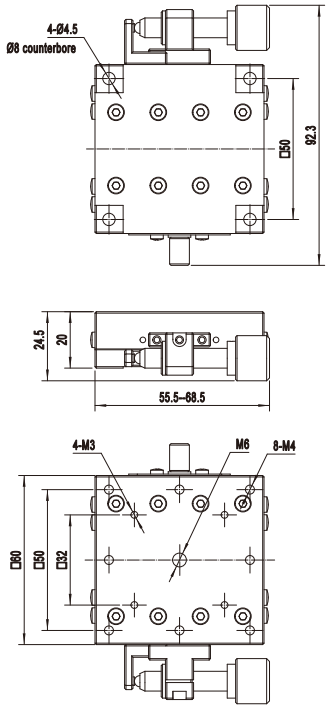

AK13A-6020LZ

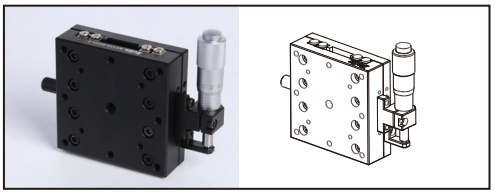

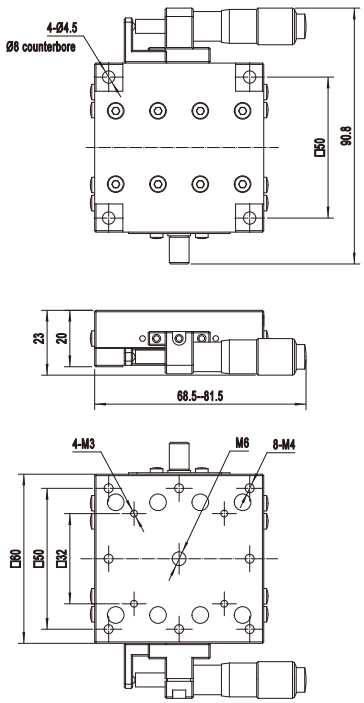

AK25-6520C

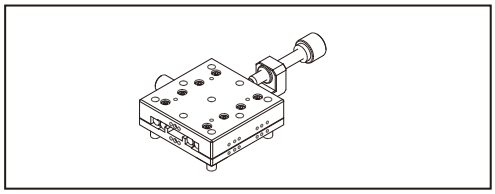

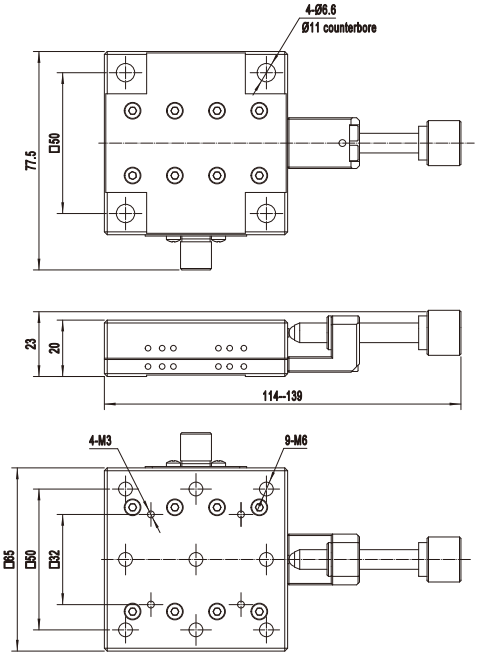

AK25A-6520C

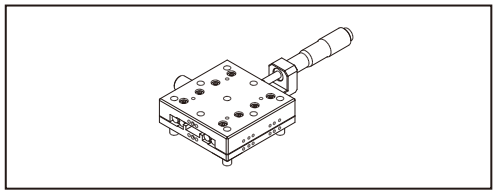

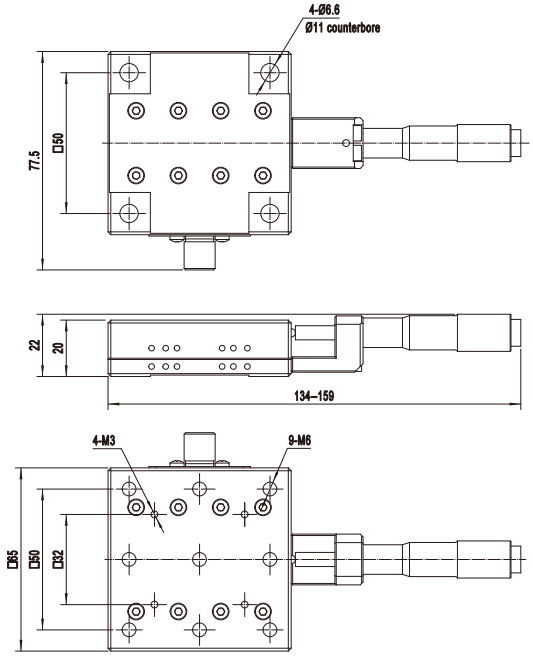

AK25-6520SR

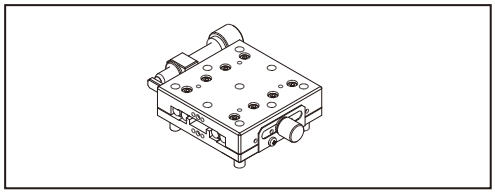

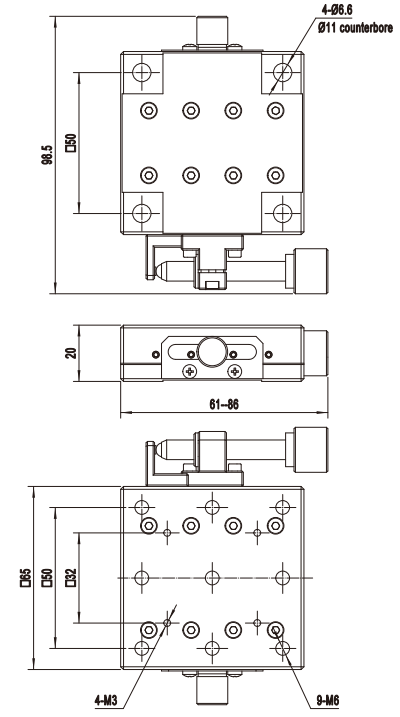

AK25A-6520SR

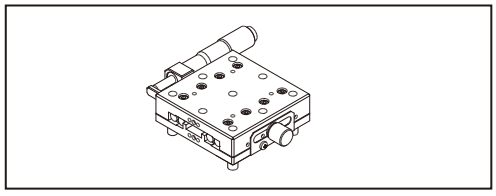

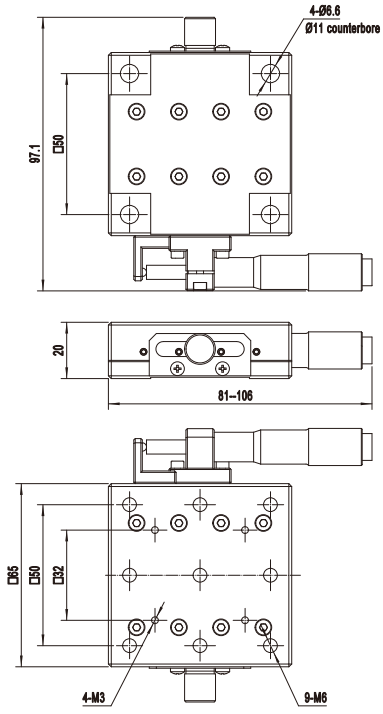

AK25-6520SL

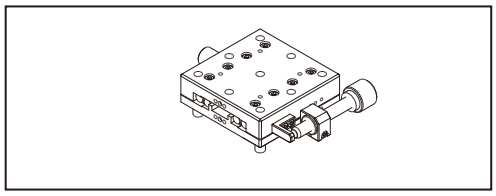

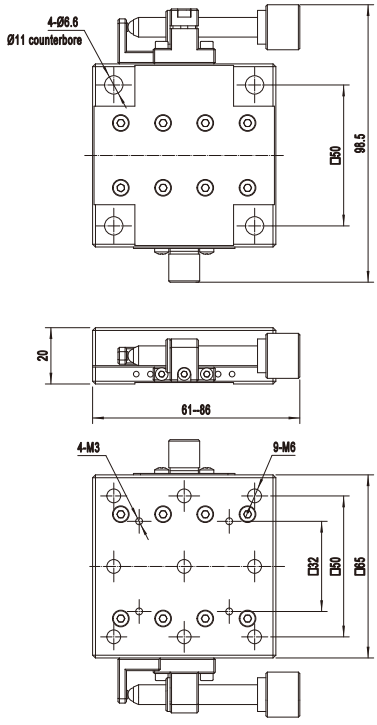

AK25A-6520SL

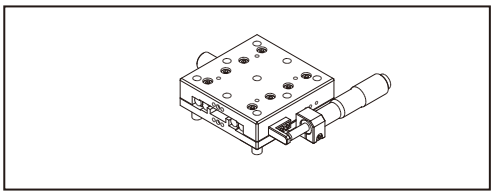

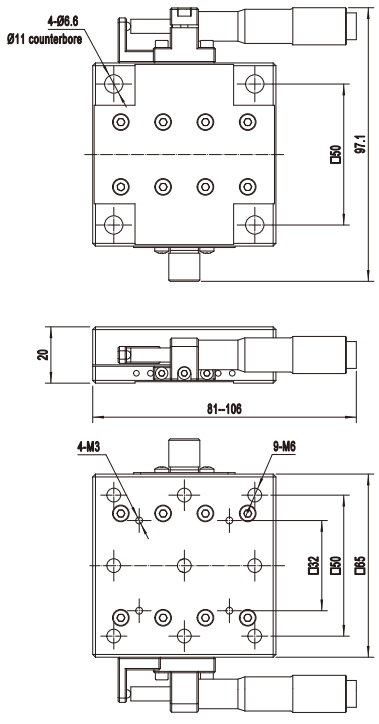

AK25-6520CZ

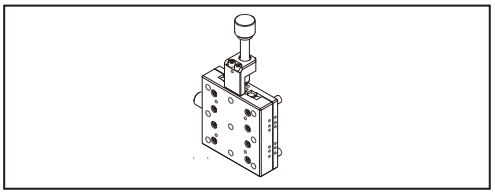

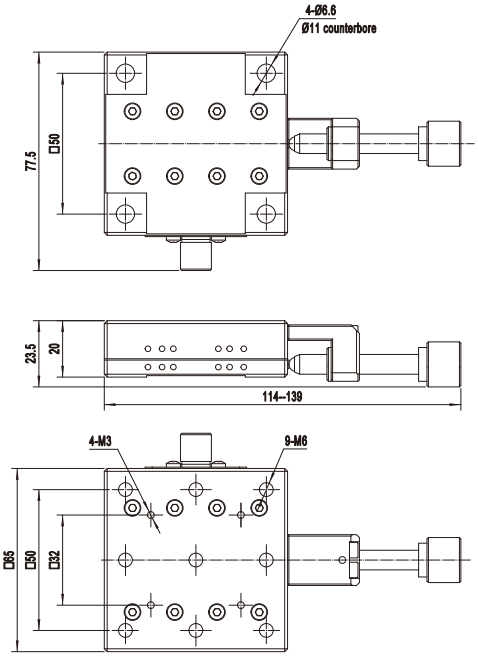

AK25A-6520CZ

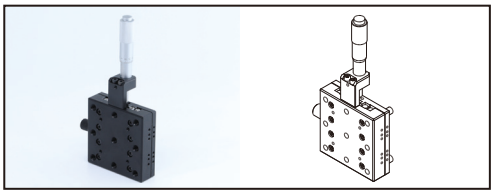

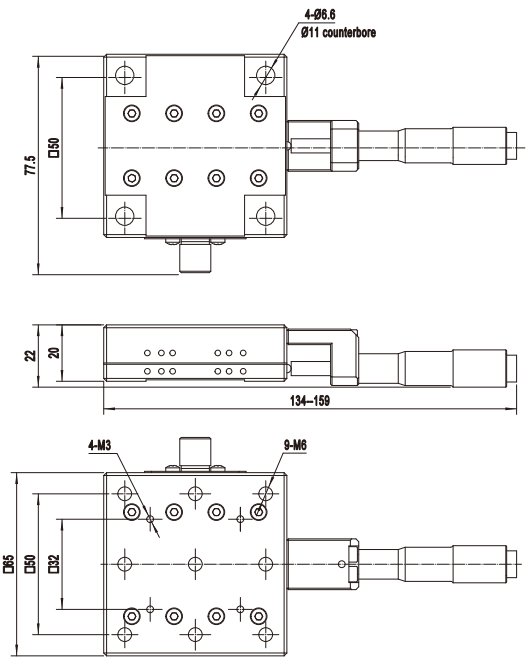

AK25-6520RZ

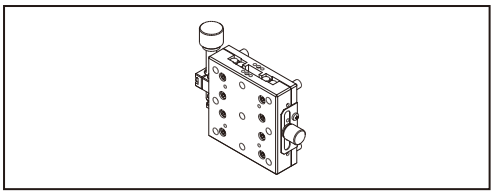

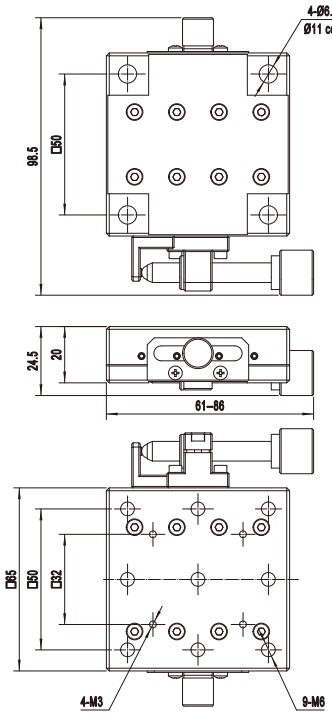

AK25A-6520RZ

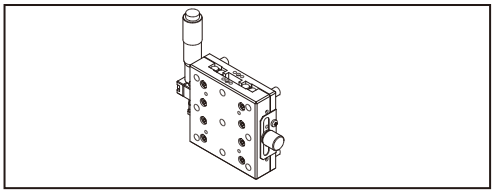

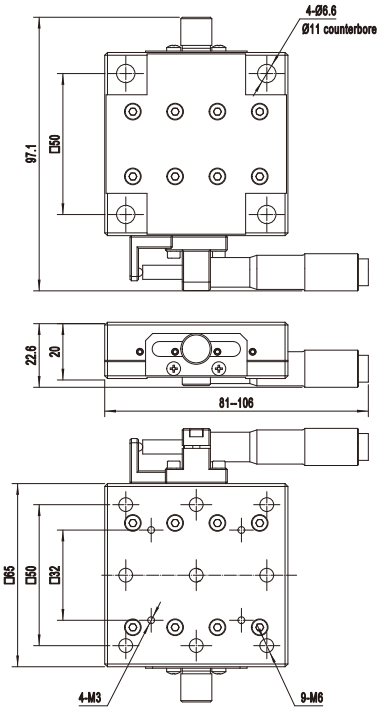

AK25-6520LZ

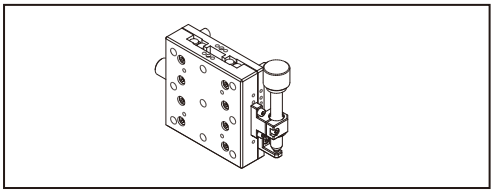

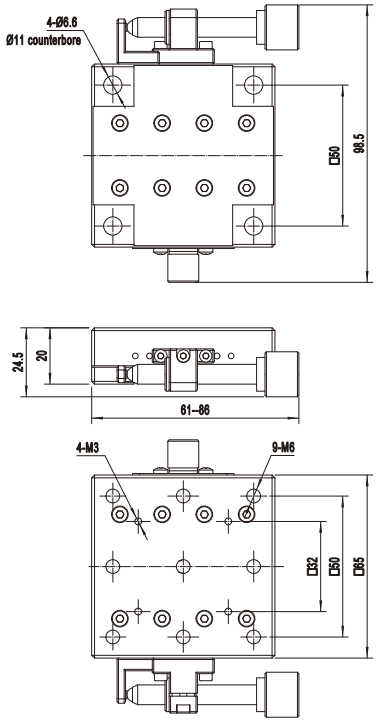

AK25A-6520LZ

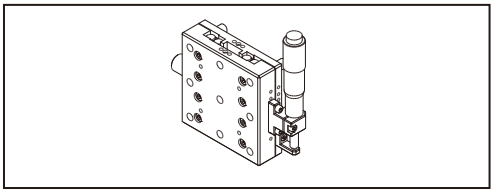

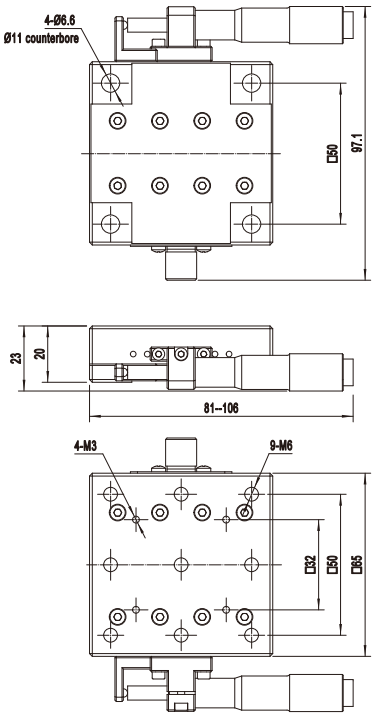

AK25-8020C

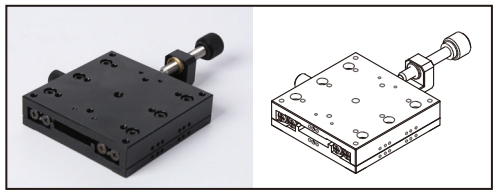

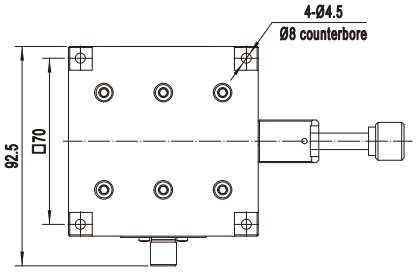

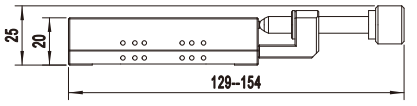

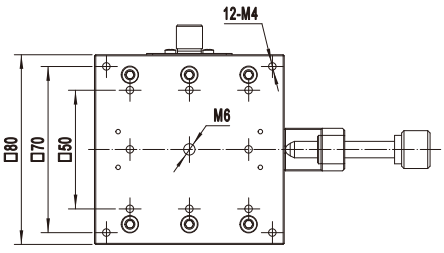

AK25A-8020C

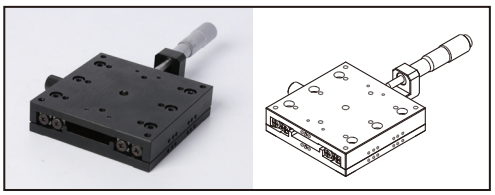

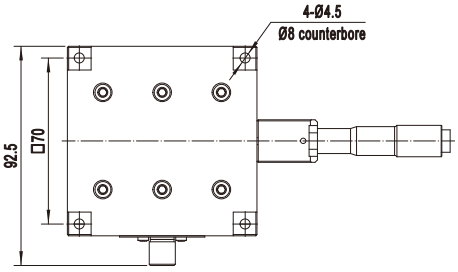

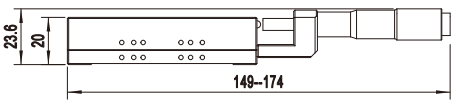

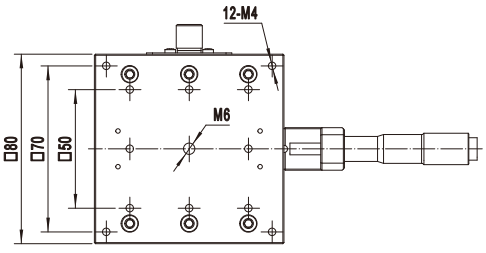

AK25-8020SR

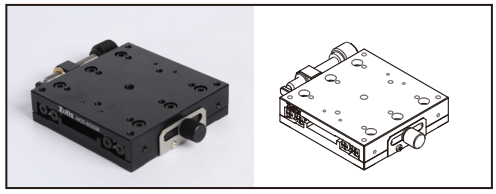

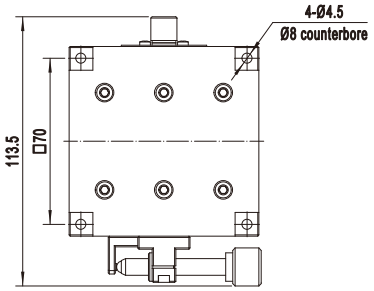

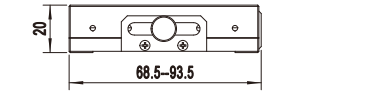

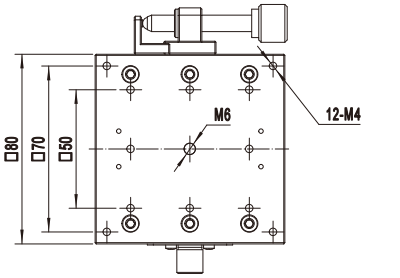

AK25A-8020SR

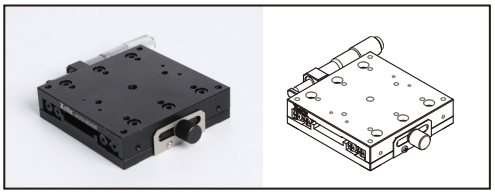

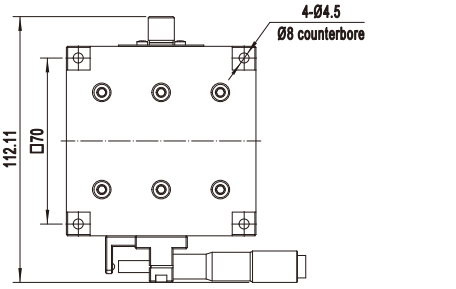

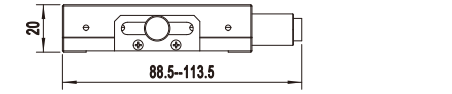

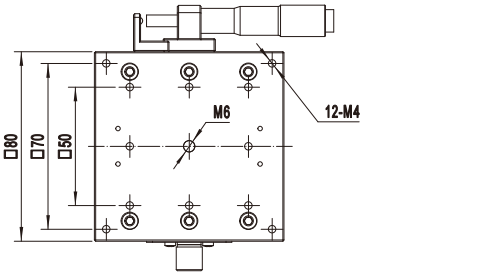

AK25-8020SL

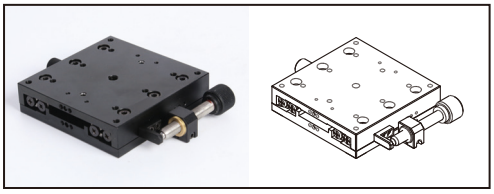

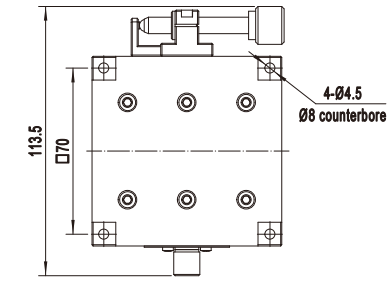

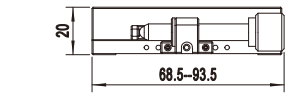

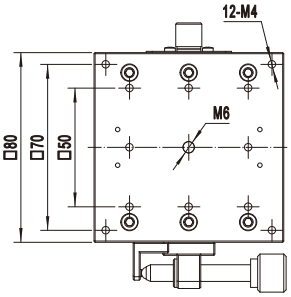

AK25A-8020SL

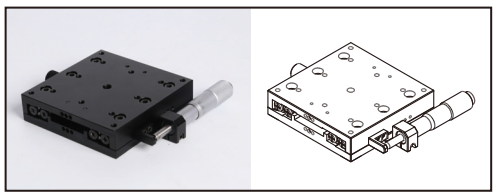

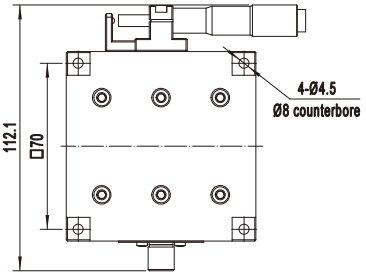

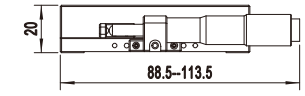

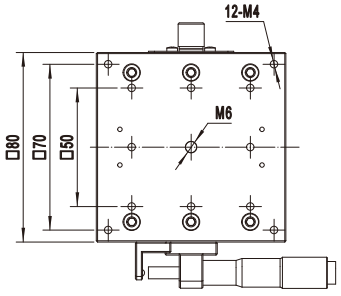

AK25-8020CZ

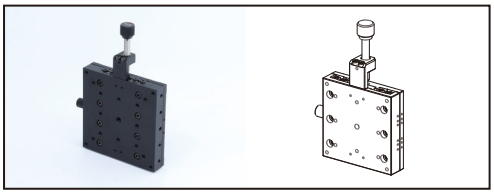

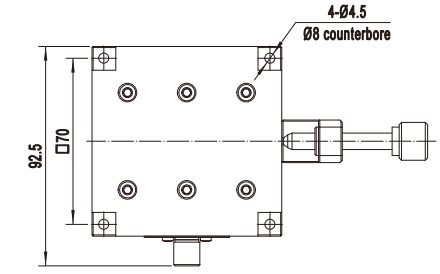

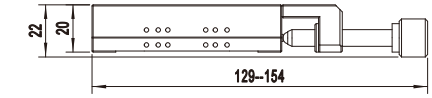

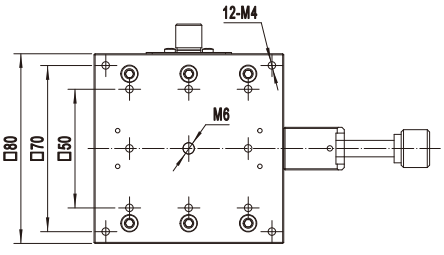

AK25A-8020CZ

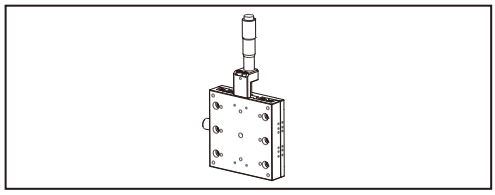

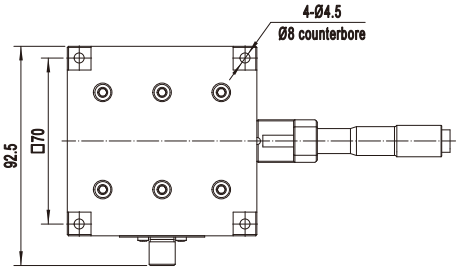

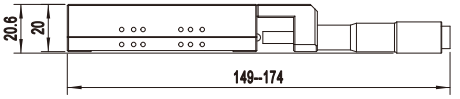

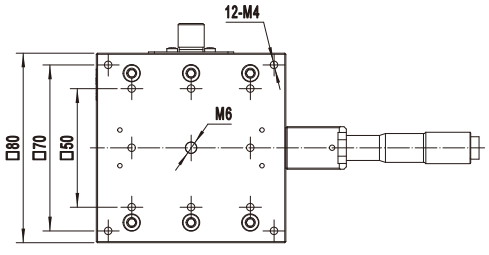

Tel: 010 56370168 www.zolix.com.cn

AK25-8020RZ

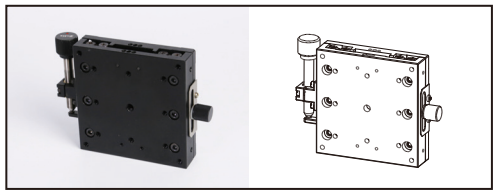

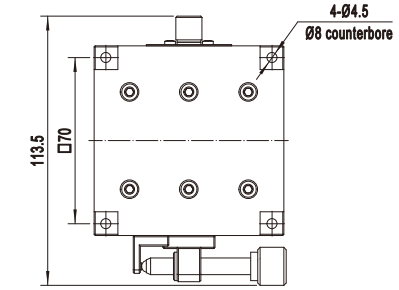

AK25A-8020RZ

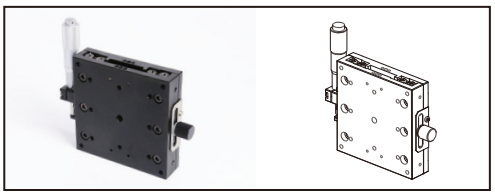

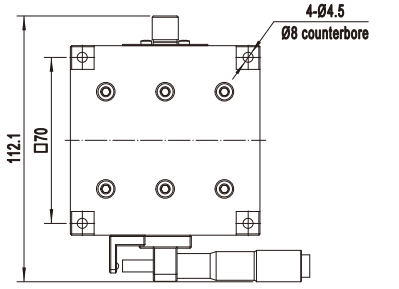

AK25-8020LZ

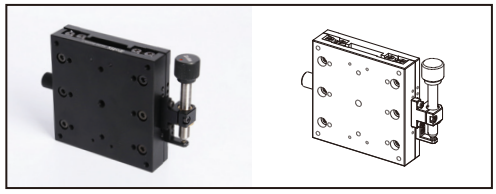

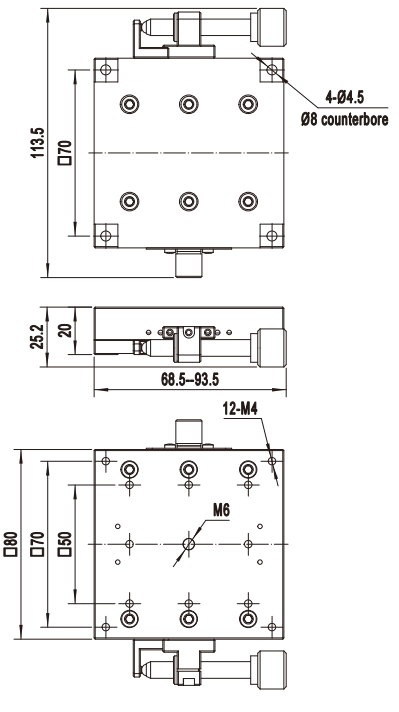

AK25A-8020LZ

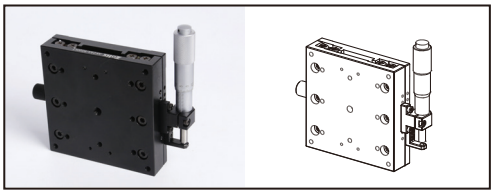

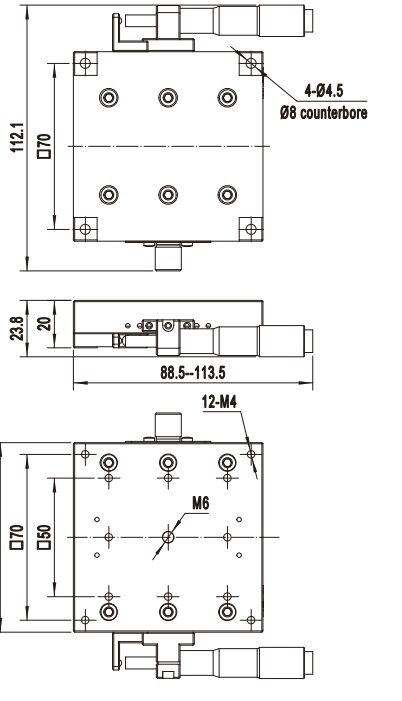

AK25-10020C

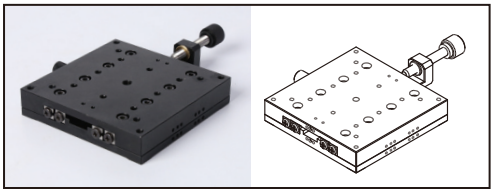

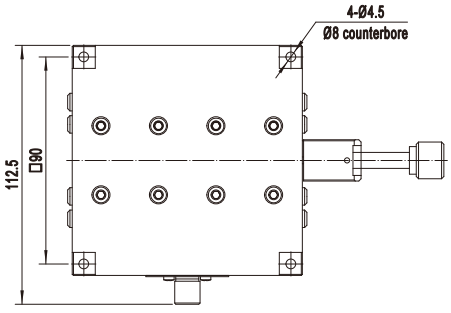

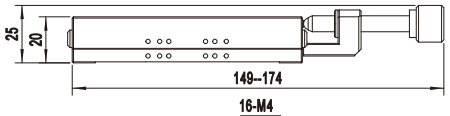

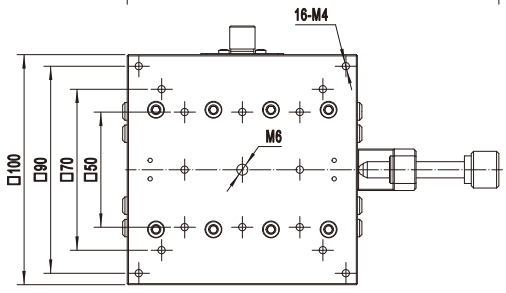

AK25A-10020C

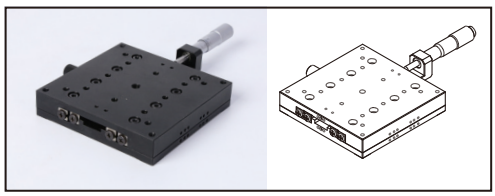

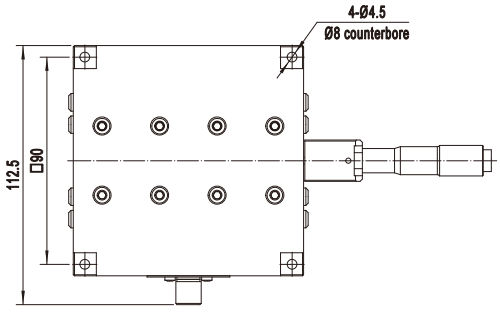

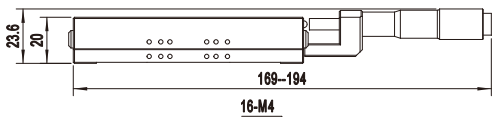

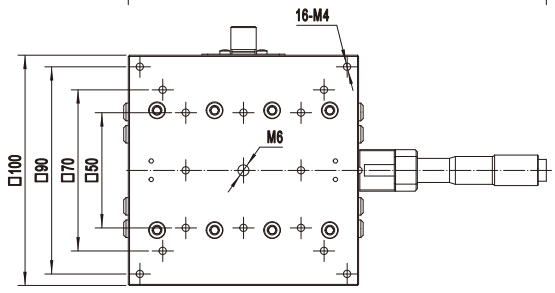

AK25-10020SR

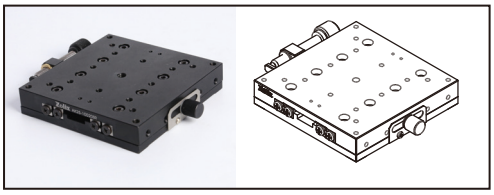

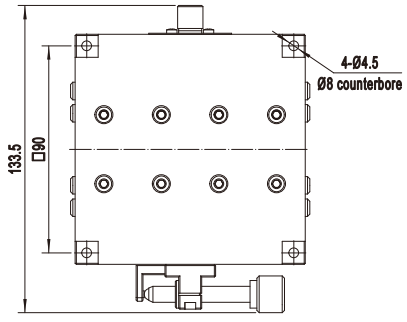

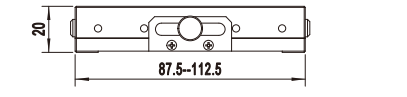

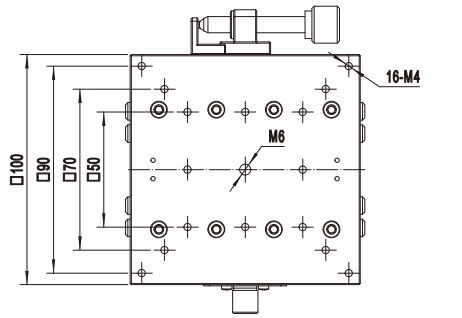

AK25A-10020SR

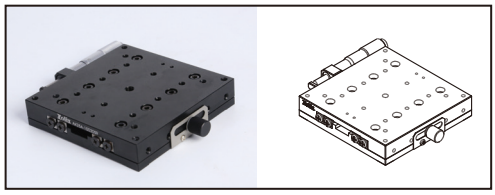

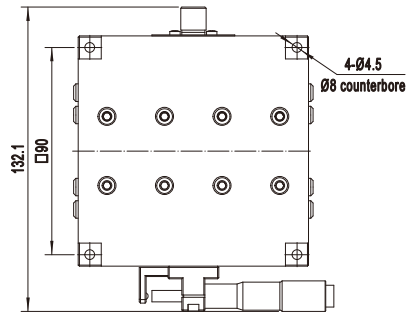

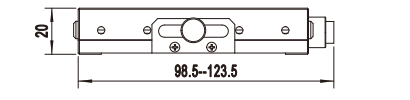

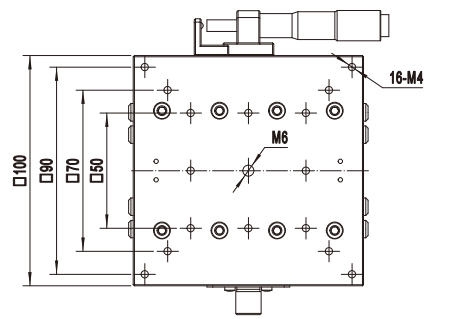

AK25-10020SL

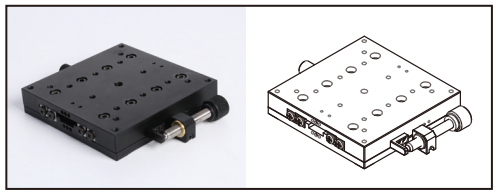

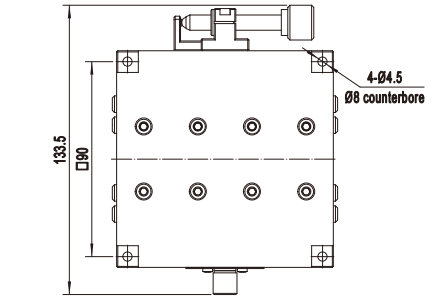

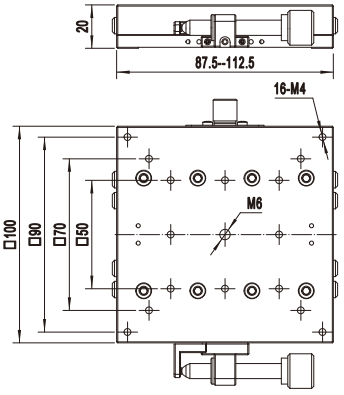

AK25A-10020SL

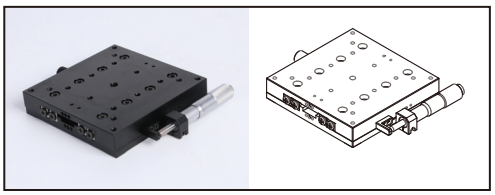

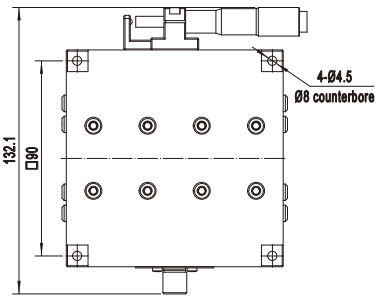

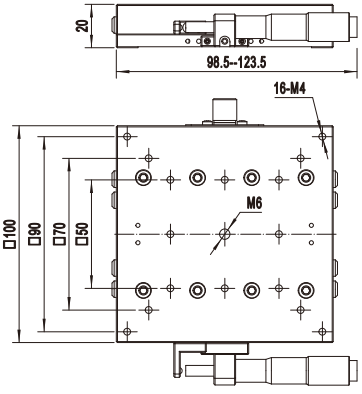

AK25-10020CZ

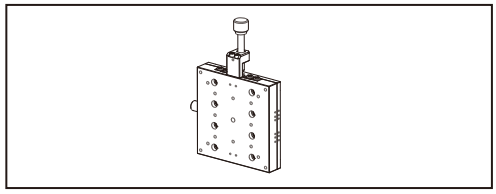

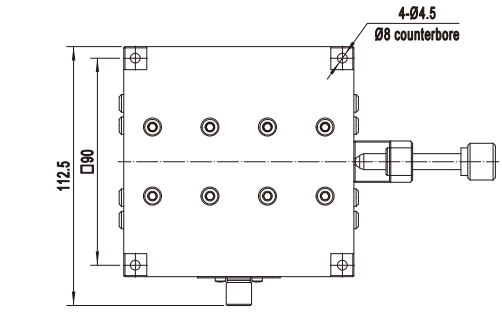

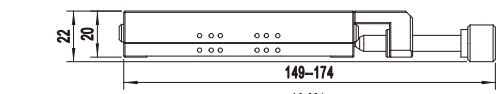

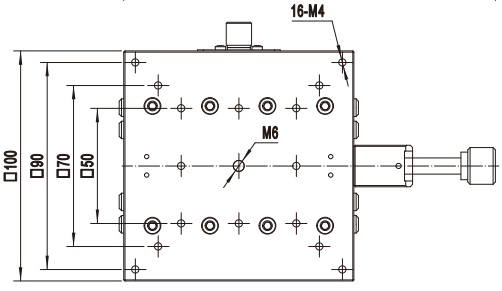

AK25A-10020CZ

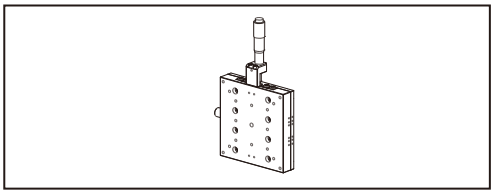

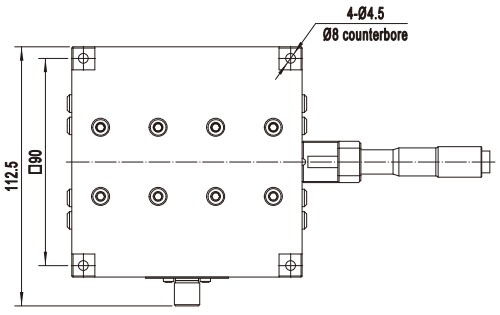

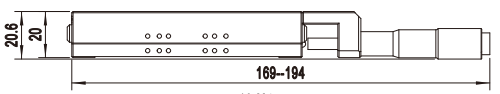

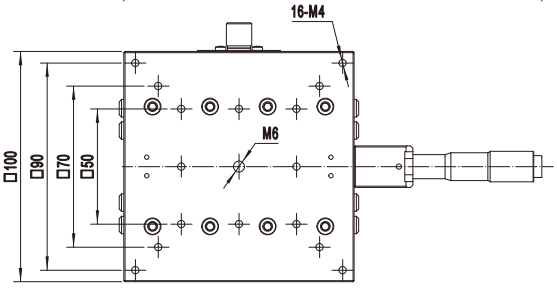

AK25-10020RZ

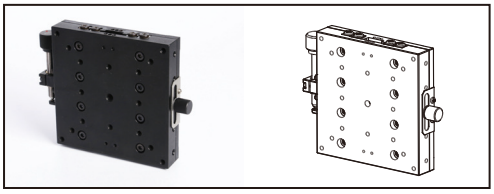

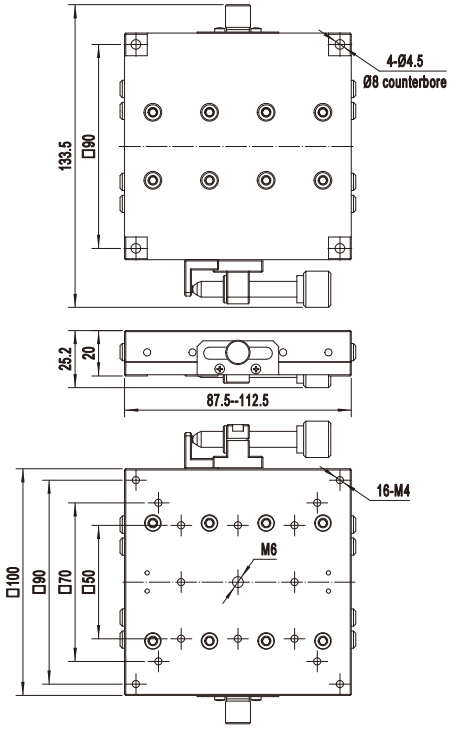

AK25A-10020RZ

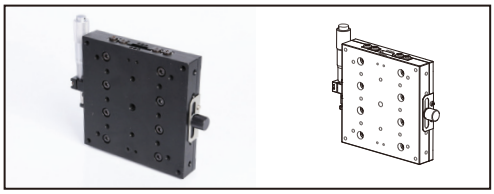

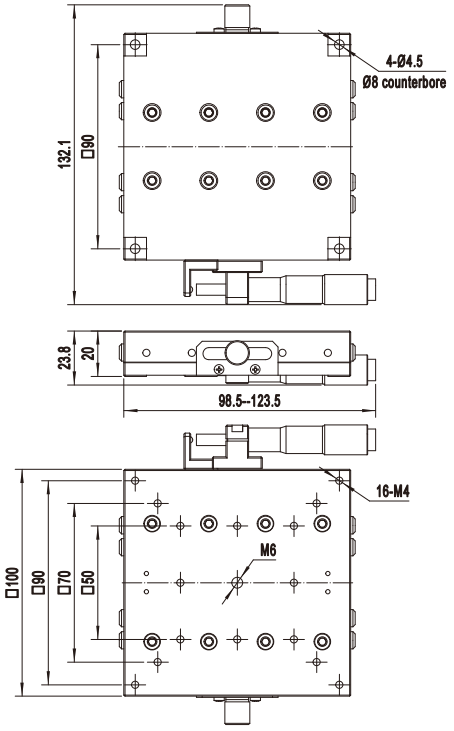

AK25-10020LZ

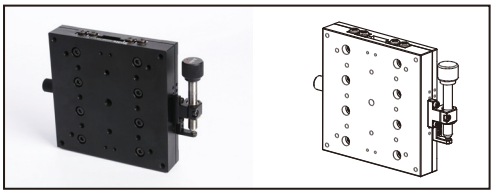

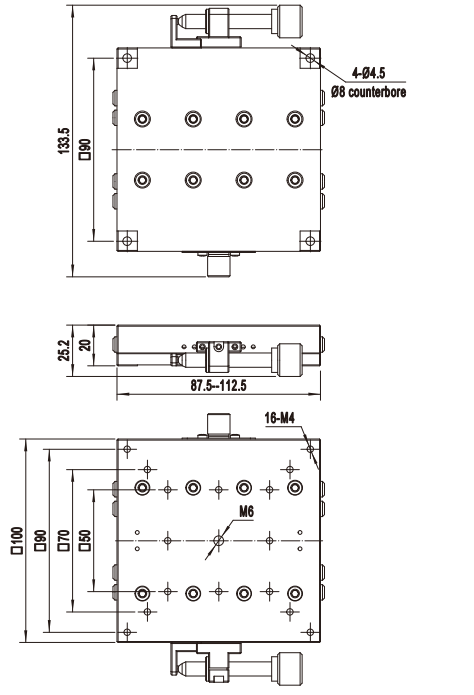
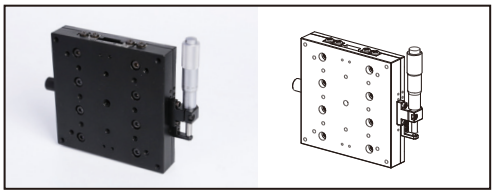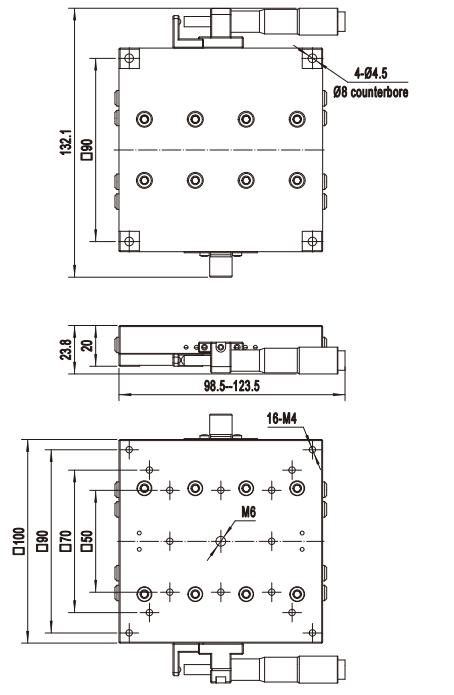
AK25A-10020LZ