# 80um InGaAs APD Preamplifier Module

# CR80AH-1550-200M

The CR80AH-1550-200M includes a 500um InGaAs Avalanche Photodiode with a hybrid preamplifier for the use in high speed, ultra-low light detection, in laser range finding, LIDAR and free space communication.

## ■ Features

- Built in 80um InGaAs APD+TIA
- High sensitivity：≥100kV/W
- High bandwidth：200Mhz
- Wavelength range:900~1700nm
- Low noise and high reliability
- TO8 package with flat window

## ■ Applications

- LIDAR
- Laser range finding
- Free space optical communication (FSO)

## ■ Absolute Maximum Ratings

| Parameter | Unit | Symbol | Rating |
|---|---|---|---|
| Reverse breakdown voltage | V | $V_R$ | $V_{BR}$ |
| Operating temperature | ℃ | $T_C$ | -40 ~ +85 |
| Storage temperature | ℃ | $T_{STG}$ | -55 ~ +100 |
| Maximum optical input power | mW | $P_{in}$ | 100 |
| Module mains voltage | V | $V_{cc}/V_{EE}$ | ±5 |
| Power dissipation | mW | $P_w$ | 250 |
| Soldering temperature(time) | ℃ | - | 300（10s） |

**Optical/Electrical Characteristics (T=25℃，unless otherwise stated)**

| Parameter | Symbol | Value | | | Unit | Test conditions |
|---|---|---|---|---|---|---|
| | | Min | Typ | Max | | |
| Response Spectrum | λ | 900~1700 | | | nm | |
| Active Diameter | D | | 80 | | um | |
| Reverse breakdown voltage | $V_{BR}$ | 30 | | 70 | V | |
| Operating voltage | $V_R$ | VR−3 | | | V | M=10 |
| Responsivity | $R_V$ | 100 | | | kV/W | M=10, 1.55um@τ=100ns |
| Dynamic range | DY | 25 | | | dB | M=10, 1.55um @τ=100ns |
| -3dB bandwidth | BW | | 200 | | Mhz | M=10, 1.55um @τ=100ns |
| Rise/Fall time | $t_r$ | | 1.75 | | ns | M=10, 1.55um @τ=100ns |
| Noise Equivalent Power | NEP | | 250 | | fW/√Hz | |

| | | | | | | |
|---|---|---|---|---|---|---|
| Output impedance | $R_O$ | | 50 | | Ω | |
| Output Voltage Swing | $V_O$ | 0.7 | | | V | |
| Positive Supply Current | $I_{CC}$ | | | 30 | mA | |
| Negative Supply Current | $I_{EE}$ | | | 10 | mA | 50Ω Load |
| Temperature coefficient of $V_{op}$ for constant gain | γ | 0.06 | 0.10 | 0.15 | V/ºC | -45～+85℃ |
| Concentricity | △D | | | 25 | um | |

## ■Schematic Block Diagram

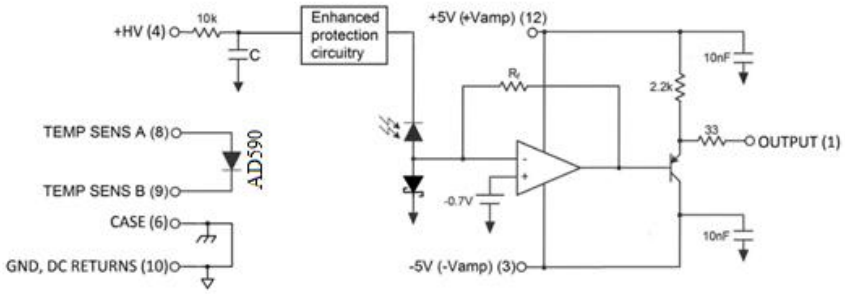


## ■ Block Diagram and Pin description

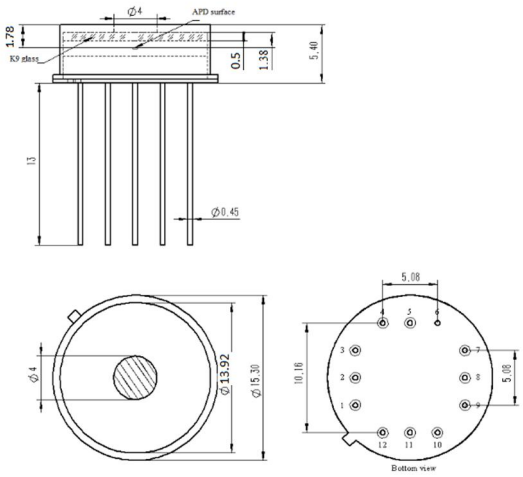


Pin description

| PIN # | DESC | PIN # | DESC |
|---|---|---|---|
| 1 | OUTPUT | 7 | NC |
| 2 | NC | 8 | TEMP SENS A |
| 3 | -5V | 9 | TEMP SENS B |
| 4 | HV, APD BIAS | 10 | GND |
| 5 | NC | 11 | NC |
| 6 | CASE | 12 | +5V |